LESSMANN®

THE GERMAN BRUSH COMPANY

Catalogue Edition 16

QUALITY MADE IN GERMANY

3 - 7 **Marketing Information**

8 - 13 **Technology, Material and Safety**

14 - 37 **Wheel Brushes**

Knot Wheel Brushes, Joint Cleaning Brushes, Pipeline Brushes, Single Segment Brushes, Wheel Brushes, Special Wheel brushes, Accessories

38 - 47 **Deburring Brushes**

Deburring Brushes, Roller Brushes, Deburring End Brushes

48 - 59 **Cup and Bevel Brushes**

Cup Brushes, Bevel Brushes, Brushes for grass trimmers

60 - 75 **Shank Brushes**

Shank Wheel Brushes, Cup Brushes with Shank, End Brushes, Miniature Brushes

76 - 93 **Hand Brushes and Brooms**

Standard Hand Brushes, Spark Plug Brushes, Fine Scratch Brushes, Special Models, Brooms and Scrubs, Dusters, Weed Brushes and Brooms

94 - 115 **Interior Brushes**

Mikro Interior Brushes, Cylinder Brushes, Sleeve Brushes, Stove Pipe Brushes, Boiler Brushes, Fitting Brushes, Brushes and Scratchers

116 - 125 **DIY Brushes and Sales Promotion**

Do It Yoursel Brushes, Packaging and Presentation, Sales Promotion

126 - 137 **Industrial Brushes**

Disc Brushes, Lath Brushes, Wheel and Roller Brushes, Strip Brushes

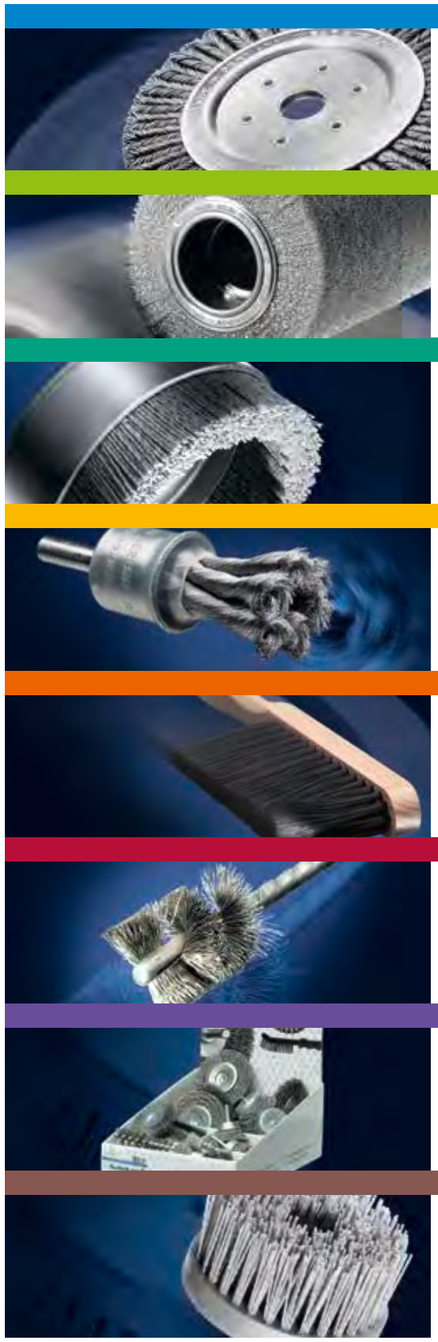

Dear customers,
dear interested parties,

As a medium-size family business LESSMANN stands for high-class surface finishing tools "Made in Germany". For us quality means to connect the experience of almost seven decades with today's technical expertise. The results are products that earn our customers' confidence in the high quality of German goods.

Retailers receive a wide assortment of standard goods for fair market value. Industrial customers may expect custom-made products which agree upon the special demands in their production processes. Permanent product improvements, working with innovative raw materials and being willed to break through technical limits, this again and again brings us new possibilities to create the ideal solutions for you.

In 2014 we finished the construction of our new 4.200 sqm production hall in Oettingen. This allows us to integrate new production areas as well as even more extensive quality and material tests. New manufacturing processes assure efficient throughput and delivery times which will be confirmed by an enlargement of our high rack storage area in 2016.

Due to our recent building investment and permanent investments in modern production facilities we give a clear commitment to the production site in Germany from where our customers in Germany and abroad receive the LESSMANN brushes. Steady service, fast response times, selected suppliers and a constantly growing know-how of our qualified and committed employees – with these values we also would like to be in future as "THE GERMAN BRUSH COMPANY" your professional partner for technical brushes.

For the achievements and decisions we stand with our name.

Jürgen Lessmann

Dieter Lessmann

Quality, Fairness, Reliability

LESSMANN®

To do the right things to the right time: the success of our company nowadays is based on contributions and entrepreneurial decisions in the past. This day, we, as a family enterprise in the third generation, are facing new customer demands and market statues, react flexible and work efficient, to gear our company up for the future!

Quality, Fairness and Reliability are the most important values in the relation to our customers and partners, since Johann Lessmann and its children Edgar and Traudel founded a small brush factory in Oettingen.

Strict quality management, uncompromising customer orientation and decades of experience make up the foundation of our success. One of the most important strengths are our 200 qualified and motivated employees, who are willing to get into new challenges, react flexible and to bring in their knowledge und competence. That's how we work together to have a mutual success.

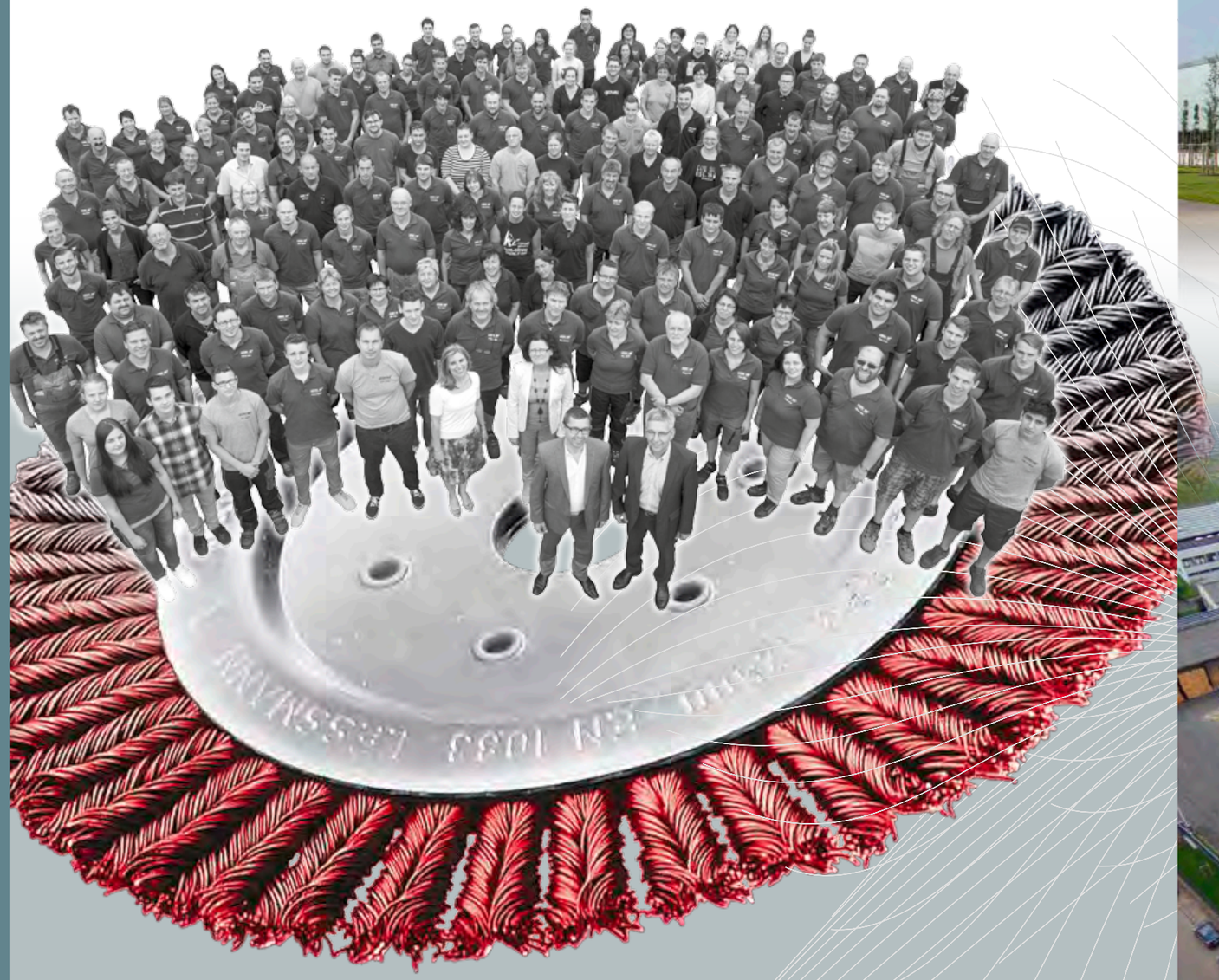

Future-oriented investment

An important investment into the future is the construction of our new 4,200 sqm production hall in 2013: this step is a visible sign of our stable growth. Another miletone will be in 2016 when enlarging the high rack storage area by about 1300 m². These steps are a visible sign of our stable growth.

Besides the new building shows our intention to assure our position as leading technological and qualitative company and to strengthen it by opening new markets! Furthermore we have more space and capacities for producing more industrial special solutions – of course in our usual best quality and accuracy!

LESSMANN – THE GERMAN BRUSH COMPANY

Made in Germany

Quality made in Germany. For Lessmann that does not only mean, that all our products are manufactured in Bavaria, but also the huge part of all raw materials as filament, wood, metal or plastics are purchased from renowned suppliers in Germany.

We manufacture almost all products in a broad standard program on our own. That's why already the quality of the raw materials has a significant role. Intensive test of the materials and inspections during production, build up two important values of the reliable LESSMANN-quality.

The headquarters in Germany requesting us to be the pioneer when using modern technology and automation. Thus our customers can receive the best quality at competitive prices.

Fit for the Globe

First-class quality products, expertise and a high flexibility – our innovative technical brushes are "Fit for the Globe".

Depending on the country we work with our own employees, regional importers or authorised retailers. Our export department has the accurate know-how, to consult and satisfy the demand of our customers globally.

Perfect Service for Perfect Presentation

The brand LESSMANN signifies quality and gives clearly structured information.

Please have a look at our home page in the internet!
On www.lessmann.com you will find our latest catalogue as well as leaflets to download. Further technical advice as well as operating instructions are available.

Self-service Tool Bar Displays
Take advantage of our experience and use this idea that will lead to successful and increased sales.

Individual Solutions for special applications

Often technical brushes for very special applications are requested. Devarnishing surfaces or rounding burrs. Each application is different and a standard tool could not be used in each case.

Every day we develop new brushes for industrial demands. In the majority of the cases, the aim of the operator is to increase productivity. Our experienced consultants will help you to make the right choice and to find the appropriate design of the brushes for your individual needs.

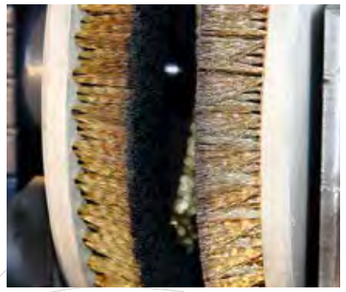

"Simply the Best" by testing

Our own production of nearly all components of our standard programme and our own development of special articles enables us to have an excellent knowledge in both manufacturing quality and safety testing.

Creating Innovation,
Exceeding Safety Standards,
Keeping Top Quality

With this motivation we make complex development and product tests as an essential part of our work.

Material Tests
These are the first steps of our quality management: All deliveries of raw material are tested according to and above specification details. All wires are tested for their tensile strength and for their reverse bending strength by a fatigue measuring process.
Beside the quality of the material it is important that its attributes are as suitable as possible for their intended use.

Imbalance Test
An imbalance of machine driven brushes is not pleasant and is dangerous for the health of persons working at the machine.
Although it is not necessary under the DIN or the EN Norms, we produce our brushes according to our own standards for minimum imbalance. By doing so our customers take advantage of smooth running fatigue reducing brushes. Our employees in production ensure that these high quality aspects are maintained.

Safety Tests
According to European safety norms all brushes have to with-stand 1.5 times of the mentioned maximum RPM. Naturally when developing a brush, we test every brush type for this safety aspect. Only if all tests are satisfactory, can the article be produced. During production many samples are taken of the brushes in order to check the required safety speed. Should a model or a raw material be changed we begin the tests again. For this very reason every customer can rely on a high quality and safe tool.

Lifetime and Power
For the measurement of the lifetime and power of technical brushes there are neither norms nor standard procedures. After long developing processes and many tests we have found testing methods that simulate testing in real working conditions. On self built machines we are able to test the abrasion and thus the lifetime and power of machine driven brushes.
Beside the quality aspect these tests are helpful in optimising materials used, as well as component parts and the construction of brushes. Even if in comparison tests with competitor brushes such testing has shown and proved the high quality of our products:

We keep on testing to guarantee customer satisfaction.

Quality is our feature!

Accredited with DIN EN ISO 9001

Recommendations for Safe Brush Use

LESSMANN Quality is Safe
We guarantee the best quality and long lifetime for our products.
Our brushes are manufactured according to the existing standard DIN 68 347 part 1 and 2 and EN 1083. All the relevant machine driven brushes are checked for occupational safety using a centrifugal force test.

Safety Information
All machine driven brushes require as with other rotary tools, that the required safety precautions are kept:

Safety for Your Body
All operators and other personnel in areas where rotary brushes are being used must wear safety goggles or face shields and protective clothing.

For your own safety:
Wear personal protective equipment

Brush Check
The brushes should be checked for damage before using.

A correct mounting is imperative.

Peripheral Speed
The max. RPM indicated in the catalogue are safety figures by which the brushes can be used without danger. Please do not exceed these figures under any circumstances! In most cases a lower RPM is sufficient to gain an optimal result.

Correct Pressure
The schedule shows the necessary motor drive power for different brush diameters. The brushes need only a light pressure while brushing because only the wire points are effective (please look at the schedule). A higher pressure does not improve the brushing effect. In fact the brush lifetime is reduced and greater power is needed. The indicated curves inform you about the expected power. The power ratings refer to a brush with 30 mm width.

Working with Shank Brushes
When working with shank brushes please note that the shank has to be inserted fully into the tool.
This is especially necessary when working with high RPM, for example on straight grinders and pneumatic tools.

Mechanical use of interior brushes
The max. RPM only is allowed when the brush is clamped min. for 10 mm into the tool. When the brush is inserted into the suitable work piece, higher RPMs are possible. Only use the brush right rotating.

Correct

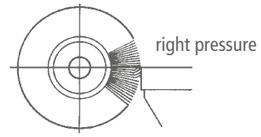

Incorrect

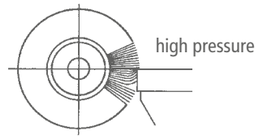

Machine usage:
These symbols in the chapters show on which machines the brushes usually are used.

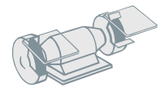

Stationary equipment

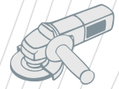

Angle grinder

Straight grinder

Drilling machine

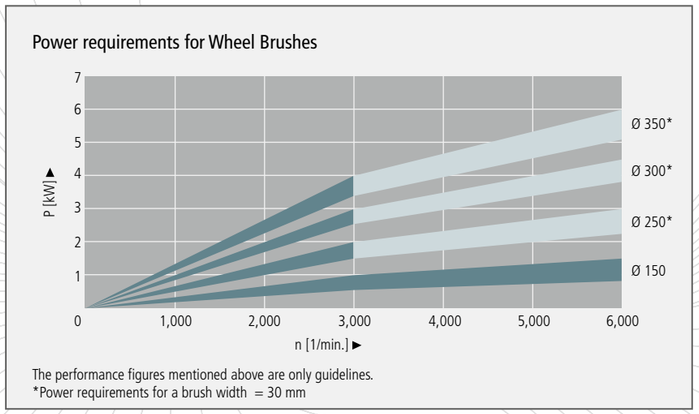

The performance figures mentioned above are only guidelines.
*Power requirements for a brush width = 30 mm

minimum bore size for wheel brushes according to DIN EN 1083

Diameter of the brush in mm	Minimum diameter of bore in mm
50	4.6
75	6.5
100	10
150	13
200	16
250	20
300	20
350	32

Recommended use of brushes on angle grinders – the right combination

Common idle speed of angle grinders (WS)	Brush diameter	60	65	75	80	90	100	115	125	150	178	200
	Knot Wheel Brush						WS 1	WS 1	WS 2	WS 3	WS 4	WS 5
Ø 115 11,000 RPM = WS 1	Cup Brush, Crimped Wire	WS 2		WS 2	WS 3		WS 3		WS 5	WS 5		
Ø 125 11,000 RPM = WS 2	Knot Cup Brush without Bridle		WS 1	WS 2	WS 2	WS 2	WS 3/4		WS 5			
Ø 150 9,000 RPM = WS 3	Knot Cup Brush with Bridle				WS 3/4		WS 3/4		WS 5			
Ø 180 8,500 RPM = WS 4	Knot Bevel Brush						WS 1					
Ø 230 6,500 RPM = WS 5	Knot Bevel Brush						WS 1	WS 1				

Warning: Before each operation please compare the idle speed of the angle grinder with the max. peripheral speed of the brush!

Producing Quality – brushing the correct way

Optimise Brush Results
The brush diameter and filling length are most important for the perfect brushing result. It is therefore very easy to eliminate almost all bad brushing results:

Brushing effect too weak:
- Increase the peripheral speed by increasing the brush diameter or the operating speed, but never exceed the maximum RPM rating.
- Use a brush with shorter trim length.
- Use a brush with larger wire diameter.

Brushing effect too powerful:
- Reduce the peripheral speed by reducing the brush diameter or the operating speed.
- Use a brush with longer trim length.
- Use a brush with smaller wire diameter.

Brush transfers burr:
- Use a brush with shorter trim length.
- Examine brush and work piece position.
- Use a brush with wider face.
- Use a brush with thicker wire diameter.

Information for brushing on stainless steel materials you find at **www.lessmann.com**

Peripheral Speed v in m/sec. (please follow the max. rotary speed of the brush!)

n [1/min.]	Brush diameter d in mm/inches							
(RPM)	50	80	100	125	150	200	250	300
	2"	3"	4"	5"	6"	8"	10"	12"
1,000		4.2	5.2	6.5	7.9	10.5	13.1	15.7
1,500	3.9	6.3	7.9	9.8	11.8	15.7	19.6	23.6
2,000	5.2	8.4	10.5	13.1	15.7	20.9	26.2	31.4
2,500	6.5	10.5	13.1	16.4	19.6	26.2	32.7	39.3
3,000	7.9	12.6	15.7	19.6	23.6	31.4	39.3	47.1
3,500	9.2	14.7	18.3	22.9	27.5	36.7	45.8	55.0
4,000	10.5	16.8	20.9	26.2	31.4	41.9	52.4	62.8
5,000	13.1	20.9	26.2	32.7	39.3	52.4	65.4	78.5
6,000	15.7	25.1	31.4	39.3	47.1	62.8	78.5	
8,000	20.9	33.5	41.9	52.4	62.8	83.8		
10,000	26.2	41.9	52.4	65.4	78.5			
12,500	32.7	52.4	65.4	81.8				
15,000	39.3	62.8	78.5					
20,000	52.4	83.8						
25,000	65.4							

$$v = \frac{\text{Brush diameter (d)} \times \pi \times \text{Peripheral Speed (n)}}{1{,}000 \times 60}$$

Conversion mm in Inches and I.S.W.G.

Brush diameter	
Millimeter	Inches
25	1"
50	2"
75	3"
100	4"
125	5"
150	6"
180	7"
200	8"
250	10"
300	12"
350	14"

Wire diameter		
Millimeter	Inches	I.S.W.G
0.08	0.0031	44
0.10	0.0039	42
0.12	0.0047	40
0.15	0.0059	38
0.20	0.0079	36
0.25	0.0098	33
0.30	0.0118	31
0.35	0.0138	29
0.40	0.0157	27
0.50	0.0197	25
0.80	0.0315	21

Recommended Peripheral Speed for Brushing Application

Application	Peripheral Speed in m/s							
	15	20	25	30	35	40	45	50
Removing Burrs				25 - 35				
Cleaning Welds						35 - 45		
Removing Scale						35 - 45		
Polishing					30 - 40			
Working on Plastic		15 - 20						

Recommended Peripheral Speed for Brushing with Abrasive Filaments
Dry conditions: 16 - 18 m/s
Wet conditions: 25 - 30 m/s

Since the upcoming heat on wet applications is conducted, the peripheral speed can be set much higher than on dry applications. For working in wet condition we recommend PA 6.12 as base. Please state on your order!

Brush filling materials and the characteristics

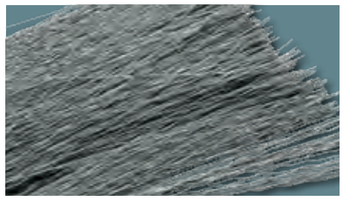

STA Steel Wire straight / crimped
is developed in co-operation with wire producers, so that it meets our special requirements. This wire is alloyed with manganese in order to increase its toughness. Result is higher tensile strength and longer lifetime of LESSMANN-Brushes.

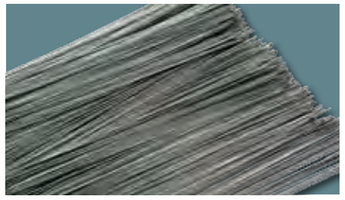

STH Steel Wire High Tensile straight / crimped
is most often used in Knotted Brushes, Deburring Brushes and Pipeline Brushes. Furthermore we offer this high tensile wire in our complete assortment. Above all it features through its tensile strength and high fatigue rates, what results in lifetime even for extreme brushing applications.

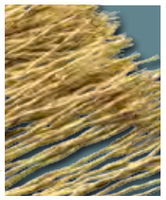

STM Brass Coated Steel Wire
For long lifetime plus high tensile strength and cutting performance. Best results in brushing and deburring applications.

STL Cord Wire
Brass coated steel wire corded. Longest lifetime for heavy duty brush applications e. g. deburring.

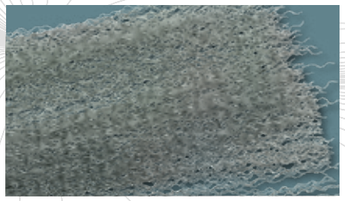

ROF / RO4 / ROL / RO8 Stainless Steel Wire
ROF must be used when working on stainless steel. Material number (WNr.) **1.4301 (AISI 304)**. This wire is resistant against corrosion and certain acids and bleaches.
RO4 Premium-quality stainless steel wire. WNr. **1.4401 (AISI 316)**
RO8 High heat resistant stainless steel wire. WNr. **1.4860**.
ROL Stainless Steel Wire with cord construction WNr. **1.4310**

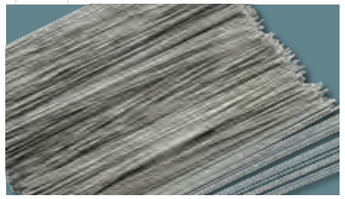

ROH Stainless Steel Wire High Tensile
This wire is characterized by a high tensile strength and a long lifetime even in extreme applications. WNr. **1.4310 (AISI 301)**.

Further information on brushing on stainless steel materials you find at **www.lessmann.com**

MES Brass Wire (CuZn)
is softer than steel wire. Among other applications brass wire is suitable for working with mild bleaches. It's mainly used for processing of nonferrous metals.

straight / crimped / knotted: Metal wires for brushes can be processed in brushes straight, crimped or knotted. Wire knots are always made with straight wires. Compared to a straight wire with the same diameter the wire knots are much stronger than the single wire. Crimped wires brace each other and therefore achieve a better stability in the brushes.

Brush filling materials and the characteristics

BRO Bronze Wire (CuSn)
is used for surface processing of wood and metal. It's also used when non sparkling brushes are needed.

NSI Nickel Silver (CuNi)
is used for polishing work pieces e. g. parts of nickel silver or brass, as it is softer than steel wire.

PP, PA, PE Synthetic Filaments
are resistant to abrasion and flexible. Despite minor resistance against heat these filaments are perfect for cleaning, grinding or surface pro-
cessing of metal, plastic or wood.
Available are:
- Polypropylen (PP)
- Polyamid (PA) - PA 6, PA 6.6, PA 6.12
- Polyethylen (PE)

FIB Fibre
consists of heat resistant plant fibre, is slightly abrasive and therefore can be used for smooth grinding, above all for working on wooden surfaces. Moreover fibre is used for general cleaning and polishing work.

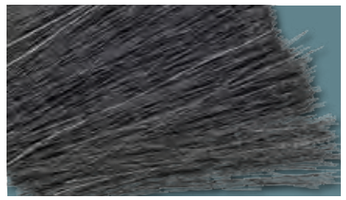

ROS Horse Hair
is an animal hair, which above all is deployed in terms of light cleaning and dusting work. Horse hair is resistant against diluted acids and bleaches. It's not chargeable for static electricity.

Encapsulated Brushes
Encapsulated brushes are ideal for an aggressive work on working pieces and for a very exact working in edges and angles.
By embedding steel wire, stainless steel wire, brass coated wire or brass wire in tough plastic, the filling width always remains the same and early break of the wires can be prevented. It's the perfect tool for long lasting and safe working. The advantages when working with encapsulated brushes are longer lifetime and harder brush effect.
Furthermore the risk of injury declines when using encapsulated brushes.
However, it might be possible that the brush will leave marks on the work piece.

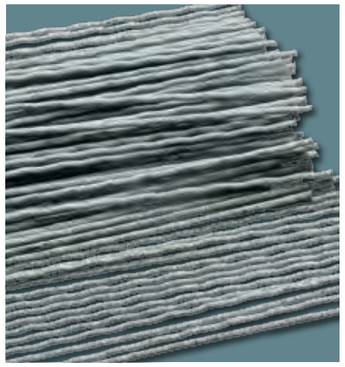

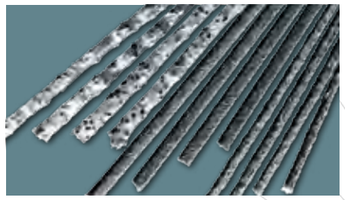

3 grits in silicon carbid

Abrasive Filaments
consist of polyamide bristles containing abrasive grits. This modern material is ideal for deburring work, fine surface finishing of plastic and metal parts as well as grinding, cleaning, polishing, and structuring of surfaces. With their flexible surface, brushes with abrasive filament align to the different shape of working pieces. Abrasive bristles also have grinding effects on the side, which makes them even more flexible to application possibilities. You can choose between grit (from K60 to K1000) composed of aluminium oxide (AO) and silicon carbide (SIC). Also diamond filament is available.

Normally 2 polyamide-types are used:
Polyamide PA 6:
- good bend recovery
- good abrasion resistance
- absorption of water to max. 10%

Polyamide PA 6.12 (ideal when working in wet surrounding):
- flexible and excellent bend recovery
- high abrasion resistance
- absorption of water to max. 3%

You can differ the bristles between round or flat bristles. Usually round bristles are used, because they are more flexible than flat bristles and very good for processing work pieces with strong shapes. Round bristles with a smaller diameter, less than 150 mm, are very efficient if you are not able to use flat material.
However, flat bristles possess a high abrasive grit, represent a long durability and a high removal rate by a larger contact surface.

Grits to choose from:

Abrasive filaments SIC (filament K60 to K1000):
- intensive results when deburring
- for surficial improvement/-processing
- mainly for process aluminium and stainless steel

Our Standard: K 80/1,4, K 120/1,1, K 180/1,0, K 240/0,75, K 320/0,60, K 800/0,25, K 800/0,50

Abrasive filaments AO (filament K60 to K1000):
- less sharp-edged compared to SIC
- to the finish of soft metal
- to polishing and smoothing
- to process aluminium when smoothing or polishing

Our Standard: K 80/1,2, K 120/1,1, K 180/0,9, K 180/1,0, K 240/0,75, K 240/0,90, K 320/0,60, K 500/0,25, K 500/0,50

Diamonds filaments(filament K60 to K1000):
- for aggressive applications
- used for materials with high material strength
- self-renewing through independent sharpening

By ordering our standard grit, also with small quantities you receive short delivery times!
The chemical components of nylon please find at **www.lessmann.com**

Physical Characteristics

	STA	STH	ROF	ROH	RO4	RO8	STM / STL	MES
WNr.			1.4301	1.4310	1.4401	1.4860		CuZn37
AISI			304	301	316			
Tensile Strength in N/mm²*	1,800 - 2,100	2,300 - 2,500	1,900 - 2,200	2,000 - 2,400	1,600 - 1,800	1,600 - 1,800	2,300 - 2.600	900 - 1,200
Specific Gravity in g/cm³	7,85	7,85	7,85	7,85	7,85	7,90	7,85	8,50
Temperature Consistancy in °C	+ 300 °C	+ 300 °C	+ 450 °C	+ 450 °C	+ 500 °C	+ 600 °C	+ 300 °C	+ 180 °C

*The specified Tensile Strength is applicable for a wire strength 0.3 - 0.4 mm

LESSMANN®
THE GERMAN BRUSH COMPANY

WHEEL BRUSHES

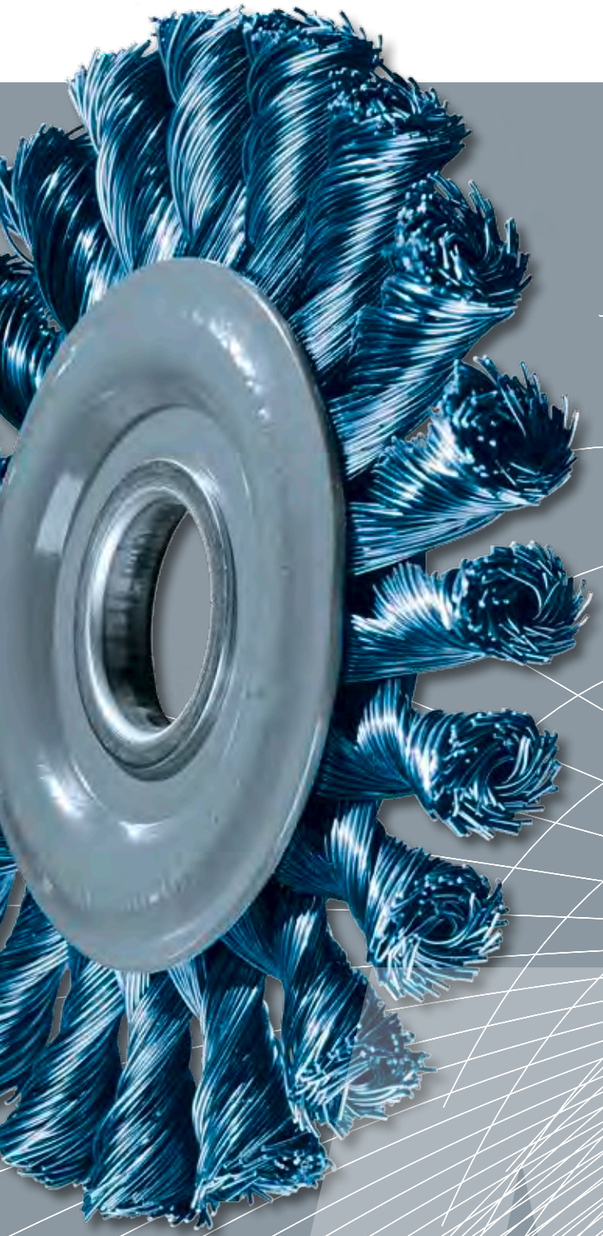

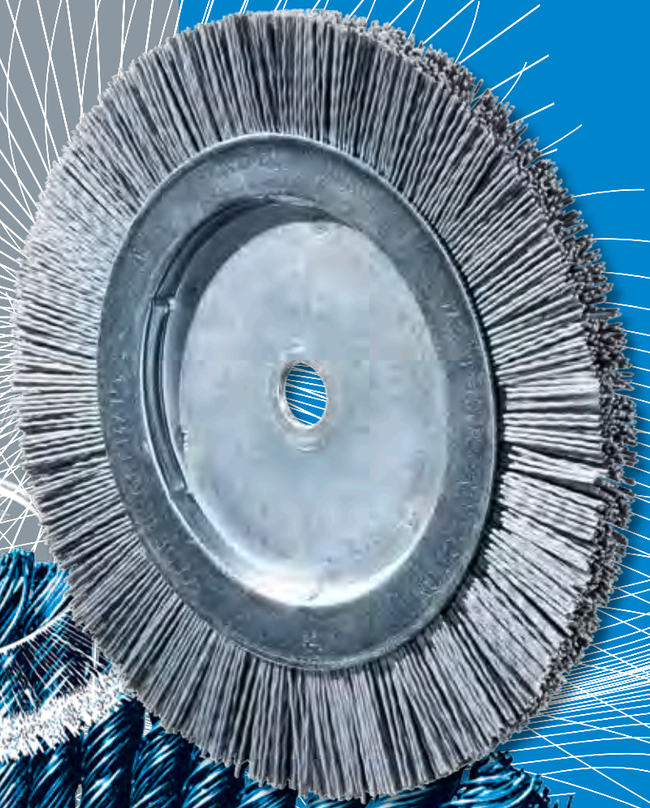

Knot Wheel Brushes

Knot Wheel Brushes
Knot wheel brushes for grinders, angle grinders and stationary machines used in the preparation and reworking of bolt fillet and butt welds. They remove scale, rust, paint, slag, rubber residue and can be used for deburring.

Knot Wheel Brushes with multiple Rows
Ready mounted brushes with multiple rows have a dense filling compared to single segment brushes, which are assembled together. In your order please state the width of the brush, bore size and type and thickness of wire.

The listed knot wheel brushes are for the use in stationary machines.

Stainless Steel Brushes
LESSMANN-brushes with stainless steel have green side plates. We use wire with material number 1.4310. Material number 1.4401 can be used on request.
Information on working on stainless steel you find at www.lessmann.com

Chunky packaging
Many articles you receive as standard in handy covering boxes with 10 pcs.

All knots on our standard twisted wire wheel brushes are left hand twisted in order to minimize the undoing of the knots should the brush be used incorrectly.
On request we can supply right hand twist brushes.

We recommend to turn the brush during use in order to maintain sharpened wire ends.

On request other bores and wire diameter are available.

Knot types ZF

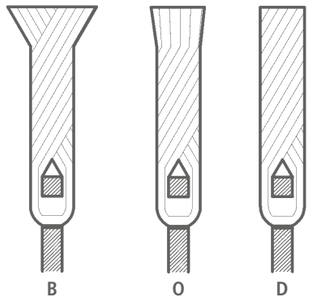

B: Rose Bud
O: Open Knot
(wire ends are cut)
D: Fully knotted
(wire ends are cut completely)

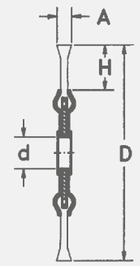

ZF = Knot type
Z = number of knots, R = number of rows

Item Nos. in bold are available ex stock.
Consider our minimum order value for *italic printed* article numbers (see page 139).

STH = steel wire, high tensile
ROH = stainless steel wire, high tensile

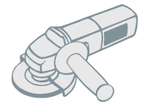

EAN

Knot Wheel Brushes, Steel Wire

D mm | *inch*	A mm | *inch*	d mm | *inch*	H	Z	ZF	R	RPM max.	Pack.	**STH 0.35** | *0.014"* Art.-No.	**STH 0.50** | *0.020"* Art.-No.	**STH 0.80** | *0.031"* Art.-No.	left-right knotted **STH 0.50** | *0.020"* Art.-No.
75 | *3*	10 | *3/8*	13 | *1/2*	15	18	B	1	25,000	1	**470.111***	**470.211***		
100 | *4*	12 | *1/2*	M 14 x 2,0	22	18	B	1	12,500	1	**471.117***	**471.217***		
115 | *4 1/2*	14 | *1/2*	22.2 | *7/8*	24	20	B	1	12,500	1	**472.111***	**472.211***		**472.211.WZ***
115 | *4 1/2*	14 | *1/2*	M 14 x 2,0	24	20	B	1	12,500	1	**472.117***	**472.217***		
125 | *5*	14 | *1/2*	22.2 | *7/8*	29	20	B	1	12,500	1	**473.111***	**473.211***		**473.211.WZ***
125 | *5*	14 | *1/2*	M 14 x 2,0	29	20	B	1	12,500	1	**473.117***	**473.217***		
125 | *5*	14 | *1/2*	22.2 | *7/8*	29	24	B	1	12,500	1		*473.211.24*		
150 | *6*	14 | *1/2*	22.2 | *7/8*	32	26	B	1	12,500	1	**474.111***	**474.211***	*474.311*	
150 | *6*	14 | *1/2*	M 14 x 2,0	32	26	B	1	12,500	1	*474.117**	**474.217***	*474.317*	
178 | *7*	14 | *1/2*	22.2 | *7/8*	38	32	B	1	12,500	1	**475.111***	**475.211***	**475.311**	
178 | *7*	14 | *1/2*	M 14 x 2,0	38	32	B	1	12,500	1	*475.117**	**475.217***	*475.317*	
200 | *8*	14 | *1/2*	22.2 | *7/8*	41	36	B	1	9,000	1	**476.111**	**476.211**	*476.311*	
200 | *8*	14 | *1/2*	50.8 | *2*	41	36	B	1	9,000	1		*476.210.51*	available on demand	
250 | *10*	15 | *5/8*	50.8 | *2***	42	52	O	1	5,000	1		**477.210.75**	*477.310.75*	
300 | *12*	18 | *3/4*	50.8 | *2***	56	58	O	1	5,000	1		*478.210.75*	*478.310.75*	

EAN

Knot Wheel Brushes, Stainless Steel Wire

D mm | *inch*	A mm | *inch*	d mm | *inch*	H	Z	ZF	R	RPM max.	Pack.	**ROH 0.35** | *0.014"* Art.-No.	**ROH 0.50** | *0.020"* Art.-No.	*left-right knotted* **ROH 0.50** | *0.020"* Art.-No.
100 | *4*	12 | *1/2*	M 14 x 2,0	22	18	B	1	12,500	1		**471.817***	
115 | *4 1/2*	14 | *1/2*	22.2 | *7/8*	24	20	B	1	12,500	1	**472.711***	**472.811***	**472.811.WZ***
115 | *4 1/2*	14 | *1/2*	M 14 x 2,0	24	20	B	1	12,500	1	**472.717***	**472.817***	
125 | *5*	14 | *1/2*	22.2 | *7/8*	29	20	B	1	12,500	1		**473.811***	**473.811.WZ***
125 | *5*	14 | *1/2*	M 14 x 2,0	29	20	B	1	12,500	1		**473.817***	
150 | *6*	14 | *1/2*	22.2 | *7/8*	32	26	B	1	12,500	1		**474.811***	
150 | *6*	14 | *1/2*	M 14 x 2,0	32	26	B	1	12,500	1		**474.817**	
178 | *7*	14 | *1/2*	22.2 | *7/8*	38	32	B	1	12,500	1		**475.811***	
178 | *7*	14 | *1/2*	M 14 x 2,0	38	32	B	1	12,500	1		**475.817**	

Thread 5/8 x 11 NC on request | * packed 10 pieces per carton | ** with turtle bore

Knot Wheel Brushes, multiple rows

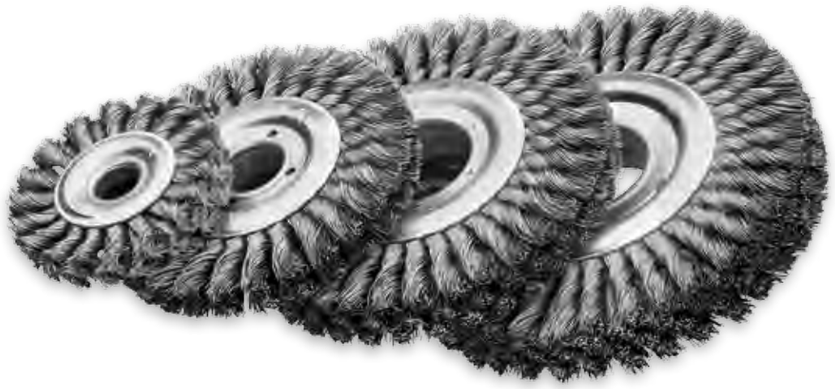

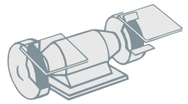

Knot Wheel Brushes, multiple rows

D mm | *inch*	A	EB	d Stand mm | *inch*	d min	H	ZF	Z x R	RPM max.	Pack.	**STH 0.35** *0.014"*	**STH 0.50** *0.020"*	**ROH 0.35** *0.014"*	**ROH 0.50** *0.020"*
100 | *4*	22-24	12	20 | *3/4*	10	21	B	20 x 2	12,500	1	*471.12K*	*471.22K*	*471.72K*	*471.82K*
100 | *4*	30-32	18	20 | *3/4*	10	21	B	20 x 3	12,500	1	*471.13K*	*471.23K*	*471.73K*	*471.83K*
100 | *4*	34-36	25	20 | *3/4*	10	21	B	20 x 4	12,500	1	*471.14K*	*471.24K*	*471.74K*	*471.84K*
115 | *4 1/2*	22-24	18	30 | *1 1/4*	10	23.5	B	22 x 2	12,500	1	*472.12K*	*472.22K*	*472.72K*	*472.82K*
115 | *4 1/2*	30-32	25	30 | *1 1/4*	10	23.5	B	22 x 3	12,500	1	*472.13K*	*472.23K*	*472.73K*	*472.83K*
115 | *4 1/2*	34-36	30	30 | *1 1/4*	10	23.5	B	22 x 4	12,500	1	*472.14K*	*472.24K*	*472.74K*	*472.84K*
125 | *5*	22-24	18	30 | *1 1/4*	13	28.5	B	24 x 2	12,500	1	*473.12K*	*473.22K*	*473.72K*	*473.82K*
125 | *5*	30-32	25	30 | *1 1/4*	13	28.5	B	24 x 3	12,500	1	*473.13K*	*473.23K*	*473.73K*	*473.83K*
125 | *5*	34-36	30	30 | *1 1/4*	13	28.5	B	24 x 4	12,500	1	*473.14K*	*473.24K*	*473.74K*	*473.84K*
150 | *6*	22-24	18	30 | *1 1/4*	13	31.5	O	28 x 2	12,500	1	*474.12K*	*474.22K*	*474.72K*	*474.82K*
150 | *6*	30-32	25	30 | *1 1/4*	13	31.5	O	28 x 3	12,500	1	*474.13K*	*474.23K*	*474.73K*	*474.83K*
150 | *6*	36-38	30	30 | *1 1/4*	13	31.5	O	28 x 4	12,500	1	*474.14K*	*474.24K*	*474.74K*	*474.84K*
178 | *7*	22-24	18	50 | *2*	16	37.5	O	34 x 2	12,500	1	*475.12K*	*475.22K*	*475.72K*	*475.82K*
178 | *7*	30-32	25	50 | *2*	16	37.5	O	34 x 3	12,500	1	*475.13K*	*475.23K*	*475.73K*	*475.83K*
178 | *7*	36-38	30	50 | *2*	16	37.5	O	34 x 4	12,500	1	*475.14K*	*475.24K*	*475.74K*	*475.84K*
200 | *8*	22-24	18	50 | *2*	16	41	O	38 x 2	9,000	1	*476.12K*	*476.22K*	*476.72K*	*476.82K*
200 | *8*	30-32	25	50 | *2*	16	41	O	38 x 3	9,000	1	*476.13K*	*476.23K*	*476.73K*	*476.83K*
200 | *8*	36-38	30	50 | *2*	16	41	O	38 x 4	9,000	1	*476.14K*	*476.24K*	*476.74K*	*476.84K*
250 | *10*	26-30	18	100 | *4*	20	42	O	52 x 2	5,000	1	*477.12K*	*477.22K*	*477.72K*	*477.82K*
250 | *10*	38-40	26	100 | *4*	20	42	O	52 x 3	5,000	1	*477.13K*	*477.23K*	*477.73K*	*477.83K*
250 | *10*	50-54	34	100 | *4*	20	42	O	52 x 4	5,000	1	*477.14K*	*477.24K*	*477.74K*	*477.84K*
300 | *12*	26-30	18	100 | *4*	30	56	O	58 x 2	5,000	1	*478.12K*	*478.22K*	*478.72K*	*478.82K*
300 | *12*	38-40	26	100 | *4*	30	56	O	58 x 3	5,000	1	*478.13K*	*478.23K*	*478.73K*	*478.83K*
300 | *12*	50-54	34	100 | *4*	30	56	O	58 x 4	5,000	1	*478.14K*	*478.24K*	*478.74K*	*478.84K*

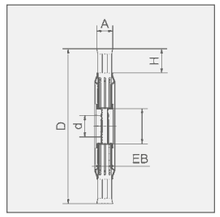

Joint Cleaning Brushes

Joint Cleaning Brushes

D mm | *inch*	A mm | *inch*	d mm | *inch*	H	Z	ZF	R	RPM max.	Pack.	**STA 0.50** | *0.020"* Art.-No.	**STA 0.80** | *0.031"* Art.-No.	**STM 0.50** | *0.020"* Art.-No.
300 | *12*	6 | *1/4*	20 | *3/4*	67	64	D	1	5,000	5	**478.200.06**	*478.300.06*	*478.500.06*
300 | *12*	8 | *5/16*	20 | *3/4*	67	64	D	1	5,000	5	**478.200.08**	**478.300.08**	*478.500.08*
300 | *12*	10 | *3/8*	20 | *3/4*	67	64	D	1	5,000	5	**478.200.10**	*478.300.10*	
300 | *12*	6 | *1/4*	25.4 | *1*	67	64	D	1	5,000	5	*478.225.06*	*478.325.06*	
300 | *12*	8 | *5/16*	25.4 | *1*	67	64	D	1	5,000	5	*478.225.08*	*478.325.08*	
300 | *12*	10 | *3/8*	25.4 | *1*	67	64	D	1	5,000	5	*478.225.10*	*478.325.10*	

Joint Cleaning Brushes
Joint cleaning brushes are used for the production of expansion joints in the construction of new linings as well as in restoration and reparation. The application of this knot wheel brush is usually alike with all pavements.

When treating concrete and mastic asphalt joints, mainly knots with a tough wire without rose bud are used, because those knots show superb resistance.

Brushes with brass coated steel wire STM are very stable, hence they are often used for cleaning concrete joints.

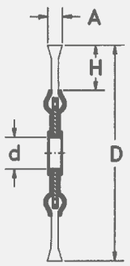

ZF = Knot type
Z = number of knots, R = number of rows

Item Nos. in bold are available ex stock.
Consider our minimum order value for *italic printed* article numbers (see page 139).

STA = steel wire
STH = steel wire, high tensile
STM = brass coated steel
ROH = stainless steel wire, high tensile

Pipeline Brushes

Pipeline-Brushes
LESSMANN-Pipelinebrushes are specially developed for professional use on U- and V-welds in the pipeline industry.

The remarkable features of the high quality LESSMANN Pipeline Brushes are the long lifetime and the quietness of running. They are especially narrow and therefore they are the perfect tool for cleaning all welds at tube connections.

Pipeline Brushes, left-right knotted
Left-right knotted pipeline brushes usually are more aggressive, hence they are often used for heavy brushing operations.
Besides the knots open less, therefore there are ideal for the treatment of edges.

Stainless Steel Brushes
LESSMANN-brushes with stainless steel wire have green side plates. We use wire with material number 1.4310. Material number 1.4401 can be used on request.
Information on working on stainless steel you find at www.lessmann.com

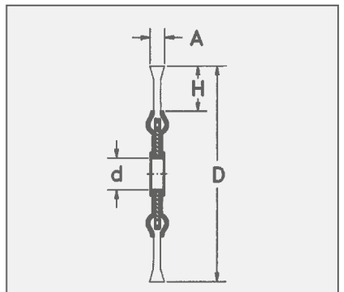

ZF = Knot type
Z = number of knots

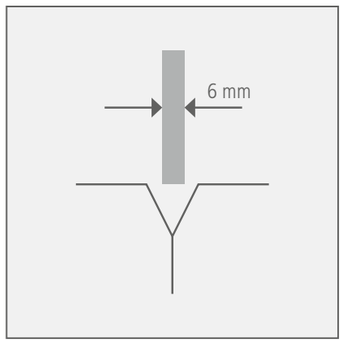

Item Nos. in bold are available ex stock.
Consider our minimum order value for *italic printed* article numbers (see page 139).

STH = steel wire, high tensile

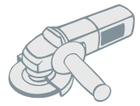

Pipeline-Brushes, Steel Wire							Bo. 22.2 | *7/8"*	M 14 x 2.0	W 5/8 x 11 NC
D mm | *inch*	A mm | *inch*	H	Z	ZF	RPM max.	Pack.*	**STH 0.50** | *0.020"* Art.-No.	**STH 0.50** | *0.020"* Art.-No.	**STH 0.50** | *0.020"* Art.-No.
100 | *4*	6 | *1/4*	19	28	D	20,000	10	available on demand	**471.207.28**	*471.208.28*
115 | *4 1/2*	6 | *1/4*	22	32	D	15,000	5/10	**472.201.32**	*472.207.32*	*472.208.32*
115 | *4 1/2*	6 | *1/4*	22	39	D	15,000	10	**472.201.39**	available on demand	available on demand
125 | *5*	6 | *1/4*	26	40	D	15,000	5/10	**473.201.40**	**473.207.40**	*473.208.40*
150 | *6*	6 | *1/4*	30	48	D	12,500	5/10	**474.201.48**	*474.207.48*	*474.208.48*
178 | *7*	6 | *1/4*	36	48	D	12,500	5/10	**475.201.48**	*475.207.48*	*475.208.48*
178 | *7*	6 | *1/4*	30	56	D	12,500	5/10	**475.201.56**	*475.207.56*	*475.208.56*
178 | *7*	6 | *1/4*	30	76	D	12,500	5/10	**475.201.76**	*475.207.76*	*475.208.76*

* Brushes with thread = packed 5 pieces per carton, brushes with bore = packed 10 pieces per carton

Pipeline-Brushes

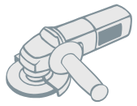

Pipeline-Brushes, Stainless Steel							Bo. 22.2 | *7/8"*	M 14 x 2.0	W 5/8 x 11 NC
D	A	H	Z	ZF	RPM	Pack.*	**ROH 0.50** | *0.020"*	**ROH 0.50** | *0.020"*	**ROH 0.50** | *0.020"*
mm | *inch*	mm | *inch*				max.		Art.-No.	Art.-No.	Art.-No.
100 | *2*	6 | *1/4*	19	28	D	20,000	10	available on demand	**471.807.28**	*471.808.28*
115 | *4 1/2*	6 | *1/4*	22	32	D	15,000	5/10*	**472.801.32**	*472.807.32*	*472.808.32*
115 | *4 1/2*	6 | *1/4*	22	39	D	15,000	10	**472.801.39**	available on demand	available on demand
125 | *5*	6 | *1/4*	26	40	D	15,000	5/10*	**473.801.40**	**473.807.40**	*473.808.40*
150 | *6*	6 | *1/4*	30	48	D	12,500	5/10*	**474.801.48**	*474.807.48*	*474.808.48*
178 | *7*	6 | *1/4*	36	48	D	12,500	5/10*	**475.801.48**	*475.807.48*	*475.808.48*
178 | *7*	6 | *1/4*	30	56	D	12,500	5/10*	**475.801.56**	*475.807.56*	*475.808.56*
178 | *7*	6 | *1/4*	30	76	D	12,500	5/10*	*475.801.76*	*475.807.76*	*475.808.76*

* Brushes with thread = packed 5 pieces per carton, brushes with bore = packed 10 pieces per carton

1 2 3

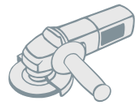

1 Pipeline Brushes, rose bud

D	A	d	H	Z	ZF	RPM	Pack.	**STH 0.50** | *0.020"*
mm | *inch*	mm | *inch*	mm | *inch*				max.		Art.-No.
178 | *7*	6 | *1/4*	22.2 | *7/8*	28	76	B	12,500	10	*475.2B1.76*

2 Pipeline Brushes, left-right knotted

D	A	d	H	Z	ZF	RPM	Pack.	**STH 0.50** | *0.020"*
mm | *inch*	mm | *inch*	mm | *inch*				max.		Art.-No.
178 | *7*	6 | *1/4*	22.2 | *7/8*	28	76	D	12,500	10	*475.2W1.76*

3 Pipeline Brushes, encapsulated

D	A	d	H	RPM	Pack.	**STM 0.35** | *0.014"*
mm | *inch*	mm | *inch*	mm | *inch*		max.		Art.-No.
150 | *6*	6 | *1/4*	22.2 | *7/8*	29	9,000	10	*300.771.KG*
178 | *7*	6 | *1/4*	22.2 | *7/8*	43	9,000	10	*351.771.KG*

Pipeline Brushes with rose bud
Knotted brushes with rose bud have a longer life time. They are used for a professional treatment of weld seams in the tube and pipeline construction.

Pipeline Brushes, left-right knotted
Left-right knotted pipeline brushes usually are more aggressive, hence they are often used for heavy brushing operations.
Besides the knots open less, therefore they are ideal for the treatment of edges.

Pipeline Brushes, encapsulated
With encapsulated pipeline brushes a very exact and precise working is possible. By embedding in tough plastic the filling width always remains the same and early break of the wires can be prevented.
A working width of 6 mm still allows to reach U- and V- weld seams.

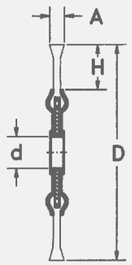

ZF = Knot type
Z = number of knots

Item Nos. in bold are available ex stock.
Consider our minimum order value for *italic printed* article numbers (see page 139).

STH = steel wire, high tensile
STM = brass coated steel
ROH = stainless steel wire, high tensile

Single Segment Brushes

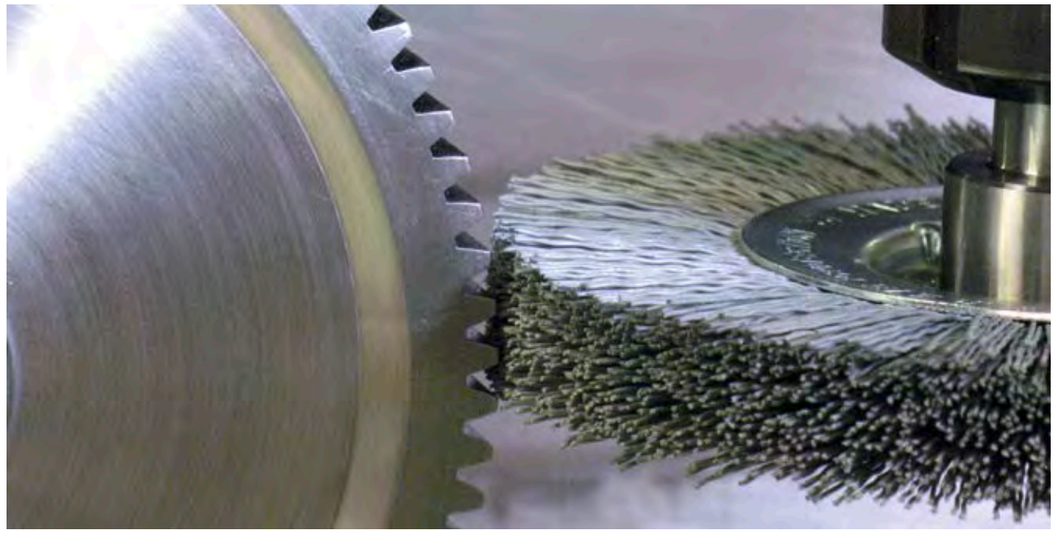

Single Segment Brushes
These brushes are mainly used for deburring purposes in stationary machines or processing centres.
The construction of these brushes allows it to assemble them to roller brushes of any desired width. Many different filling materials like steel, stainless steel or abrasive nylon with various grit are at your disposal.

Outstanding Processing
The flexible bristles align to the different shapes of working pieces.
An important advantage of the single segment brushes compared to other grinding tools, such as pads or grinding discs, is their gentle treatment.
Furthermore the brushes do not become encrusted. They are suitable for deburring work and fine polishing of stainless steel, light metal or plastic material. Besides the executions listed on this page other diameters and grit sizes are available.

Stainless Steel Brushes
LESSMANN-brushes with stainless steel wire have a laser imprint.
Information on working on stainless steel you find at www.lessmann.com

Laser imprint of brushes

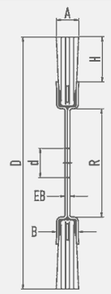

„**A**“ can be up to 4 mm larger than „**B**“

For further information on abrasive filaments please see page 13.
Item Nos. in bold are available ex stock.
Consider our minimum order value for *italic printed* article numbers (see page 139).

SIC = silicon carbide bristles

1

2

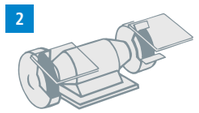

1 Single Segment Wheel Brushes, Silicon Carbide Bristles

D mm | *inch*	R	B	H	d Stand. mm | *inch*	d min./max.	RPM max.	Pack.	SIC 80/1.2 Art.-No.	SIC 120/1.1 Art.-No.	SIC 120/0.6 Art.-No.	SIC 180/1.0 Art.-No.	SIC 320/0.6 Art.-No.
80 | *3 1/4*	26	12	17	12 | *1/2*	12-16	12,000	5		available on demand	*310.841*	**310.851**	*310.871*
100 | *2*	30	12	21	12 | *1/2*	12-20	8,000	5	*320.821*	available on demand	**320.841**	**320.851**	**320.871**
125 | *5*	30	12	33	12 | *1/2*	12-20	8,000	5	*330.821*	available on demand	**330.841**	**330.851**	*330.871*
150 | *6*	50	14	32	12 | *1/2*	12-30	6,000	5	**340.821**	**340.831**	**340.841**	**340.851**	**340.871**
178 | *7*	50	14	46	12 | *1/2*	12-30	6,000	5	*350.821*	*350.831*	**350.841**	*350.851*	*350.871*
178 | *7*	60	16	43	12 | *1/2*	12-40	6,000	5		available on demand	*351.841*	*351.851*	*351.871*
200 | *8*	60	16	54	12 | *1/2*	12-40	6,000	5		*361.831*	*361.841*	*361.851*	*361.871*
200 | *8*	80	16	43	16 | *5/8*	16-60	6,000	5		available on demand	*362.841*	**362.851**	*362.871*
200 | *8*	100	16	32	16 | *5/8*	16-80	6,000	5		*360.831*	**360.841**	**360.851**	**360.871**
250 | *10*	100	16	57	16 | *5/8*	16-80	6,000	5		available on demand	*370.841*	**370.851**	**370.871**
250 | *10*	120	16	45	20 | *3/4*	20-100	3,600	5		available on demand	*371.841*	*371.851*	*371.871*
250 | *10*	150	19	30	25.4 | *1*	25-130	3,600	5		*372.831*	*372.841*	**372.851**	*372.871*
300 | *12*	120	16	70	20 | *3/4*	20-100	3,600	5		available on demand	*380.841*	*380.851*	*380.871*
300 | *12*	150	19	35	25.4 | *1*	25-130	3,600	5		*381.831*	*381.841*	*381.851*	*381.871*
300 | *12*	200	19	30	*25.4* | *1*	25.4-170	2,600	5			*38T.841*	*38T.851*	

2 Single Segment Wheel Brushes, Silicon Carbide Bristles, 2 rows

D mm | *inch*	R	B	H	d Stand. mm | *inch*	d min./max.	RPM max.	Pack.	SIC 120/0.6 Art.-No.	SIC 180/1.0 Art.-No.	SIC 320/0.6 Art.-No.
200 | *8*	80	27	43	16 | *5/8*	16-60	6,000	5	available on demand	*362.852*	available on demand
250 | *10*	100	27	58	16 | *5/8*	16-80	6,000	5	available on demand	*370.852*	available on demand

Bore must be indicated in the order. Standard bore delivery ex stock, short termed. Other bores are available with extra charge: 1 - 10 pcs. EUR 5,00 / 11 - 25 pcs. EUR 3,00
R > 60 EB 3.0 mm / R < 60 EB 2.4 mm

Single Segment Wheel Brushes

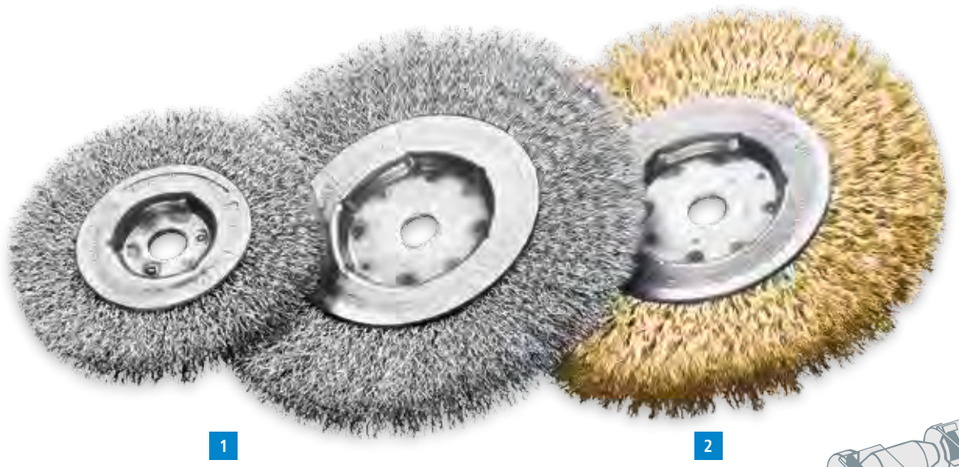

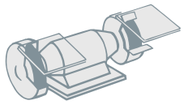

Single Segment Wheel Brushes, Steel Wire

D mm | *inch*	R	B	H	d Stand. mm | *inch*	d min./max.	RPM max.	Pack.	1 STA 0.20 | *0.008"* Art.-No.	1 STA 0.30 | *0.012"* Art.-No.	2 STL 0.35 | *0.014"* Art.-No.
80 | *3 1/4*	26	12	17	12 | *1/2*	12-16	12,000	5	**310.141**	*310.161*	available on demand
100 | *4*	30	12	21	12 | *1/2*	12-20	8,000	5	**320.141**	**320.161**	*320.707*
125 | *5*	30	12	33	12 | *1/2*	12-20	8,000	5	*330.141*	*330.161*	available on demand
125 | *5*	40	12	29	12 | *1/2*	12-25	8,000	5	available on demand	*331.161*	available on demand
150 | *6*	50	14	32	12 | *1/2*	12-30	6,000	5	**340.141**	**340.161**	*340.707*
178 | *7*	50	14	46	12 | *1/2*	12-30	6,000	5	*350.141*	**350.161**	available on demand
178 | *7*	60	16	43	12 | *1/2*	12-40	6,000	5	*351.141*	*351.161*	*351.707*
200 | *8*	60	16	54	12 | *1/2*	12-40	6,000	5	*361.141*	*361.161*	available on demand
200 | *8*	80	16	43	16 | *5/8*	16-60	6,000	5	*362.141*	*362.161*	*362.707*
200 | *8*	100	16	32	16 | *5/8*	16-80	6,000	5	**360.141**	**360.161**	*360.707*
250 | *10*	100	16	57	16 | *5/8*	16-80	6,000	5	*370.141*	**370.161**	available on demand
250 | *10*	120	16	45	20 | *3/4*	20-100	3,600	5	*371.141*	*371.161*	available on demand
300 | *12*	120	16	70	20 | *3/4*	20-100	3,600	5	*380.141*	*380.161*	available on demand
300 | *12*	150	19	55	25.4 | *1*	25.4-130	3,600	5		*381.161*	

Single Segment Wheel Brushes, Steel Wire, 2 rows

D mm | *inch*	R	B	H	d Stand. mm | *inch*	d min./max.	RPM max.	Pack.	STH 0.35 | *0.014"* Art.-No.
200 | *8*	80	27	43	16 | *5/8*	16-60	6,000	5	*362.272*
250 | *10*	100	27	58	16 | *5/8*	16-80	6,000	5	*370.272*

Bore must be indicated in the order. Standard bore delivery ex stock, short termed. Other bores are available with extra charge: 1 - 10 pcs. EUR 5,00 / 11 - 25 pcs. EUR 3,00
R > 60 EB 3.0 mm / R < 60 EB 2.4 mm

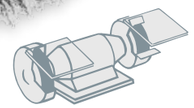

Single Segment Wheel Brushes, Stainless Steel Wire

D mm | *inch*	R	B	H	d Stand. mm | *inch*	d min./max.	RPM max.	Pack.	ROF 0.20 | *0.008"* Art.-No.	ROF 0.30 | *0.012"* Art.-No.
80 | *3 1/4*	26	12	17	12 | *1/2*	12-16	12,000	5	*310.341*	*310.361*
100 | *2*	30	12	21	12 | *1/2*	12-20	8,000	5	**320.341**	**320.361**
125 | *5*	30	12	33	12 | *1/2*	12-20	8,000	5	*330.341*	**330.361**
125 | *5*	40	12	29	12 | *1/2*	12-25	8,000	5	available on demand	*331.361*
150 | *6*	50	14	32	12 | *1/2*	12-30	6,000	5	**340.341**	**340.361**
178 | *7*	50	14	46	12 | *1/2*	12-30	6,000	5	*350.341*	**350.361**
178 | *7*	60	16	43	12 | *1/2*	12-40	6,000	5	*351.341*	*351.361*
200 | *8*	60	16	54	12 | *1/2*	12-40	6,000	5	*361.341*	*361.361*
200 | *8*	80	16	43	16 | *5/8*	16-60	6,000	5	*362.341*	*362.361*
200 | *8*	100	16	32	16 | *5/8*	16-80	6,000	5	*360.341*	**360.361**
250 | *10*	100	16	57	16 | *5/8*	16-80	6,000	5	*370.341*	*370.361*
250 | *10*	120	16	45	20 | *3/4*	20-100	6,000	5	*371.341*	*371.361*
300 | *12*	120	16	70	20 | *3/4*	20-100	3,600	5	*380.341*	*380.361*
300 | *12*	150	19	55	25.4 | *1*	25.4-130	3,600	5		*381.361*

Bore must be indicated in the order. Standard bore delivery ex stock, short termed. Other bores are available with extra charge: 1 - 10 pcs. EUR 5,00 / 11 - 25 pcs. EUR 3,00
R > 60 EB 3.0 mm / R < 60 EB 2.4 mm

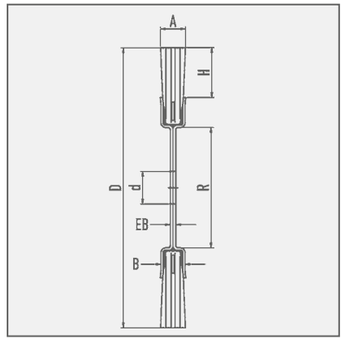

For further information on abrasive filaments please see page 13.
Item Nos. in bold are available ex stock.
Consider our minimum order value for *italic printed* article numbers (see page 139).

STA = steel wire
STH = steel wire, high tensile
STL = cord wire, crimped
ROF = stainless steel wire

Wheel Brushes

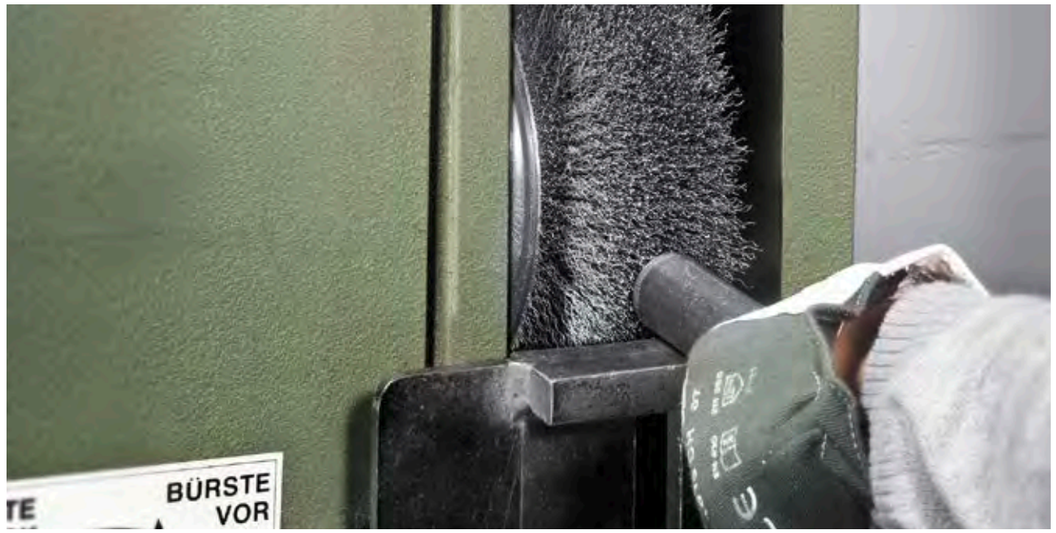

Wheel Brushes
Wheel brushes filled with crimped wire are used for the purpose of obtaining different surface finishing:
- the removal of rust, paint and dirt
- for roughening, deburring, stripping or polishing.

Big or Small?
A decisive factor for choosing the most suitable brush is the wire and tube diameter. Brushes with a larger tube diameter (measure R) are filled with more wire, are more aggressive and have a longer life.
In our catalogue are the usual tube diameters – other diameters can also be supplied.
More technical instruction such as peripheral speed etc. see pages 8 - 10.

The bore must be indicated in the order. Without any instruction delivery will be with standard bore "d Stand".

Stainless Steel Brushes
Information on working on stainless steel you find at www.lessmann.com

Other filling materials, filling diameters and special executions
Take advantage of the LESSMANN range of products, of the experience in developing and producing brushes! We are able to produce special executions on demand.

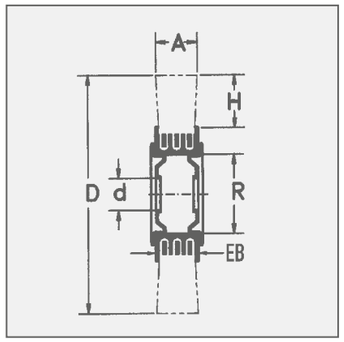

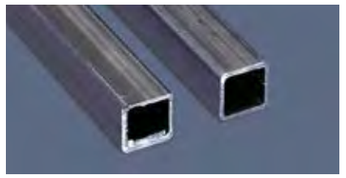

Plate with tube 80 and 100

Item Nos. in bold are available ex stock.
Consider our minimum order value for *italic printed* article numbers (see page 139).

STA = steel wire
STM = brass coated steel

Adapter Set
All brushes are supplied with adapter sets for easy mounting on all popular grinding machines. The adapters have the following dimensions:

Set 1 / tube 30:
30 / 1" / 22,2 / 20 / 16 / 1/2" / 12
Set 2 / tube 40:
40 / 32 / 1" / 22.2 / 20 / 16 / 1/2"
Set 3 / tube 50:
50 / 32 / 1" / 22.2 / 20 / 16 / 1/2"
Set 4 / tube 80 + 100:
brushes with metal discs, bore 50.8 and double keyway 7x13; plus adapter to bore 30.
Set 5 / tube 80 + 100:
brushes with metal discs, bore 50.8 and double keyway 7x13; plus adapter to bore 32.

By usage without adapter set the actual size might be up to 0.2 mm below nominal size.

EAN

Wheel Brushes, Steel Wire

									1			2
D	A	EB	R	H	d Stand.	d	RPM	Pack.	**STA 0.15** | *0.006"*	**STA 0.20** | *0.008"*	**STA 0.30 / 0.35***	**STM 0.30** | *0.012"*
mm | *inch*					mm | *inch*	min./max.	max.		Art.-No.	Art.-No.	*0.012" / 0.014"*	Art.-No.
80 | *3 1/4*	18-20	18	20	20	10 | *3/8*	10-20	10,000	1	available on demand	**312.142**	**312.162**	
80 | *3 1/4*	25-27	24	20	20	10 | *3/8*	10-20	10,000	1	available on demand	*312.143*	**312.163**	
100 | *4*	20-22	19	30	23	Set 1	10-30	8,000	1	*323.132*	**323.142**	**323.162**	
100 | *4*	28-30	25	30	23	Set 1	10-30	8,000	1	*323.133*	**323.143**	**323.163**	
125 | *5*	21-23	20	40	27	Set 2	13-40	6,000	1	*334.132*	**334.142**	**334.162**	
125 | *5*	29-31	26	40	27	Set 2	13-40	6,000	1	available on demand	*334.143*	**334.163**	
150 | *6*	22-24	20	40	33	Set 2	13-40	6,000	1	*344.132*	**344.142**	**344.172***	
150 | *6*	30-34	26	40	33	Set 2	13-40	6,000	1	*344.133*	**344.143**	**344.173***	
150 | *6*	23-25	22	50	33	Set 3	13-50	6,000	1	*345.132*	**345.142**	**345.162**	*345.762*
150 | *6*	30-34	29	50	33	Set 3	13-50	6,000	1	*345.133*	**345.143**	**345.163**	
178 | *7*	23-26	22	50	37	Set 3	16-50	6,000	1	available on demand	**355.142**	**355.162**	*355.762*
178 | *7*	32-35	29	50	37	Set 3	16-50	6,000	1	*355.133*	**355.143**	**355.163**	
200 | *8*	24-27	22	50	48	Set 3	16-50	6,000	1	*365.132*	**365.142**	**365.172***	
200 | *8*	35-38	29	50	48	Set 3	16-50	6,000	1	*365.133*	**365.143**	**365.173***	
200 | *8*	28-32	25	80	38	Set 4+1	16-80	4,500	1	available on demand	**366.142**	**366.162**	*366.762*
200 | *8*	40-45	33	80	38	Set 4+1	16-80	4,500	1	available on demand	*366.143*	**366.163**	
250 | *10*	30-35	25	80	50	Set 4+1	20-80	3,600	1	available on demand	**376.142**	**376.162**	
250 | *10*	42-45	33	80	50	Set 4+1	20-80	3,600	1	available on demand	available on demand	**376.163**	
250 | *10*	32-37	26	100	50	Set 4+1	20-100	3,600	1	available on demand	**377.142**	**377.162**	*377.762*
250 | *10*	43-48	35	100	50	Set 4+1	20-100	3,600	1	available on demand	*377.143*	**377.163**	
250 | *10*	55-60	45	100	50	Set 4+1	20-100	3,600	1	available on demand	*377.144*	**377.164**	
300 | *12*	35-40	26	100	60	Set 4	30-100	3,000	1	available on demand	**387.142**	**387.162**	
300 | *12*	47-52	35	100	60	Set 4	30-100	3,000	1	available on demand	*387.143*	**387.163**	
350 | *14*	35-40	26	100	85	Set 5	32-100	2,400	1	available on demand	*397.142*	**397.172***	
350 | *14*	55-60	35	100	85	Set 5	32-100	2,400	1	available on demand	*397.143*	**397.173***	

Bore must be indicated in the order. Standard bore delivery ex stock, short termed. Other bores are available with extra charge: 1 - 10 pcs. EUR 5.00 / 11 - 25 pcs. EUR 3.00

EAN **Wheel Brushes, Stainless Steel**

D mm | *inch*	A	EB	R	H	d Stand. mm | *inch*	d min./max.	RPM max.	Pack.	**ROF 0.20** | *0.008"* Art.-No.	**ROF 0.30** | *0.012"* Art.-No.
80 | *3 1/4*	18-20	18	20	20	10 | *3/8*	10-20	10,000	1	*312.342*	**312.362**
80 | *3 1/4*	25-27	24	20	20	10 | *3/8*	10-20	10,000	1	available on demand	*312.363*
100 | *4*	20-22	19	30	23	Set 1	10-30	8,000	1	*323.342*	**323.362**
100 | *4*	28-30	25	30	23	Set 1	10-30	8,000	1	*323.343*	**323.363**
125 | *5*	21-23	20	40	27	Set 2	13-40	6,000	1	*334.342*	**334.362**
125 | *5*	29-31	26	40	27	Set 2	13-40	6,000	1	*334.343*	**334.363**
150 | *6*	22-24	20	40	33	Set 2	13-40	6,000	1	*344.342*	**344.362**
150 | *6*	30-34	26	40	33	Set 2	13-40	6,000	1	available on demand	**344.363**
150 | *6*	23-25	22	50	33	Set 3	13-50	6,000	1	*345.342*	**345.362**
150 | *6*	30-34	29	50	33	Set 3	13-50	6,000	1	*345.343*	**345.363**
178 | *7*	23-26	22	50	37	Set 3	16-50	6,000	1	*355.342*	**355.362**
178 | *7*	32-35	29	50	37	Set 3	16-50	6,000	1	available on demand	**355.363**
200 | *8*	24-27	22	50	48	Set 3	16-50	6,000	1	*365.342*	**365.362**
200 | *8*	35-38	29	50	48	Set 3	16-50	6,000	1	*365.343*	**365.363**
200 | *8*	28-32	25	80	38	Set 4+1	16-80	4,500	1	*366.342*	**366.362**
200 | *8*	40-45	33	80	38	Set 4+1	16-80	4,500	1	*366.343*	**366.363**
250 | *10*	30-35	25	80	50	Set 4+1	20-80	3,600	1	*376.342*	**376.362**
250 | *10*	42-45	33	80	50	Set 4+1	20-80	3,600	1	*376.343*	**376.363**
250 | *10*	32-37	26	100	50	Set 4+1	20-100	3,600	1	*377.342*	**377.362**
250 | *10*	43-48	35	100	50	Set 4+1	20-100	3,600	1	*377.343*	**377.363**
300 | *12*	35-40	26	100	60	Set 4	30-100	3,000	1	*387.342*	**387.362**
300 | *12*	47-52	35	100	60	Set 4	30-100	3,000	1	*387.343*	*387.363*
350 | *14*	35-40	26	100	85	Set 5	32-100	2,400	1	available on demand	*397.362*

Bore must be indicated in the order. Standard bore delivery ex stock, short termed. Other bores are available with extra charge: 1 - 10 pcs. EUR 5.00 / 11 - 25 pcs. EUR 3.00

EAN **Wheel Brushes, Brass Wire**

D mm | *inch*	A	EB	R	H	d Stand. mm | *inch*	d min./max.	RPM max.	Pack.	**MES 0.20** | *0.008"* Art.-No.	**MES 0.30** | *0.012"* Art.-No.
80 | *3 1/4*	18-20	18	20	20	10 | *3/8*	10-20	10,000	1	**312.542**	*312.562*
80 | *3 1/4*	25-27	24	20	20	10 | *3/8*	10-20	10,000	1	*312.543*	*312.563*
100 | *4*	20-22	19	30	23	Set 1	10-30	8,000	1	**323.542**	*323.562*
100 | *4*	28-30	25	30	23	Set 1	10-30	8,000	1	*323.543*	*323.563*
125 | *5*	21-23	20	40	27	Set 2	13-40	6,000	1	**334.542**	*334.562*
125 | *5*	29-31	26	40	27	Set 2	13-40	6,000	1	*334.543*	available on demand
150 | *6*	22-24	20	40	33	Set 2	13-40	6,000	1	*344.542*	**344.562**
150 | *6*	30-32	26	40	33	Set 2	13-40	6,000	1	*344.543*	**344.563**
150 | *6*	23-25	22	50	33	Set 3	13-50	6,000	1	**345.542**	**345.562**
150 | *6*	30-34	29	50	33	Set 3	13-50	6,000	1	*345.543*	**345.563**
178 | *7*	23-26	22	50	37	Set 3	16-50	6,000	1	*355.542*	**355.562**
178 | *7*	32-35	29	50	37	Set 3	16-50	6,000	1	*355.543*	**355.563**
200 | *8*	24-27	22	50	48	Set 3	16-50	6,000	1	*365.542*	**365.562**
200 | *8*	35-38	29	50	48	Set 3	16-50	6,000	1	*365.543*	**365.563**
200 | *8*	28-32	25	80	38	Set 4+1	16-80	4,500	1	**366.542**	**366.562**
200 | *8*	40-45	33	80	38	Set 4+1	16-80	4,500	1	*366.543*	*366.563*
250 | *10*	30-35	25	80	50	Set 4+1	20-80	3,600	1	*376.542*	*376.562*
250 | *10*	42-45	33	80	50	Set 4+1	20-80	3,600	1	available on demand	available on demand
250 | *10*	32-37	26	100	50	Set 4+1	20-100	3,600	1	available on demand	**377.562**
250 | *10*	43-48	35	100	50	Set 4+1	20-100	3,600	1	available on demand	available on demand
300 | *12*	35-40	26	100	60	Set 4	30-100	3,000	1	available on demand	**387.562**
300 | *12*	47-52	35	100	60	Set 4	30-100	3,000	1	available on demand	available on demand
350 | *14*	35-40	26	100	85	Set 5	32-100	2,400	1	available on demand	*397.562*

Bore must be indicated in the order. Standard bore delivery ex stock, short termed. Other bores are available with extra charge: 1 - 10 pcs. EUR 5.00 / 11 - 25 pcs. EUR 3.00

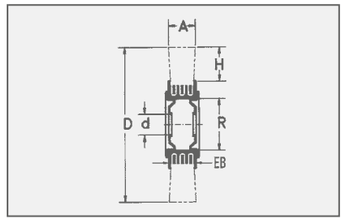

Item Nos. in bold are available ex stock.
Consider our minimum order value for *italic printed* article numbers (see page 139).

ROF = stainless steel wire

MES = brass wire

Brushes for the wood machining industry

Satin Brushes
Satin brushes are the perfect tool for satining, polishing, abrading/smoothing, matting and structuring.

Staple Set Wheel and Disc Brushes
Wheel and Disc Brushes with abrasive nylon filament are used fort he wood machining industry. Used on angle grinders, the disc brushes are ideal for maintaining, cleaning, strucutring or polishing wood.
Besides the brushes are used for giving wood a rustic effect or for roughening it before treating with colour or lacquer.
The brushes are very effective when working on large surfaces.

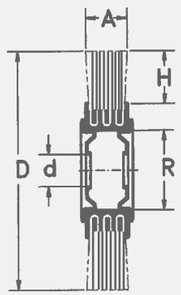

Satin Brushes

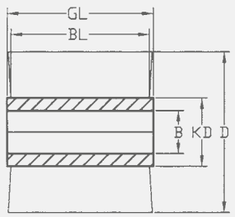

Wheel Brushes

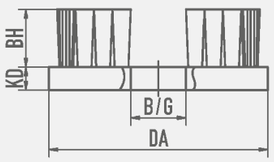

Disc Brushes

Item Nos. in bold are available ex stock.
Consider our minimum order value for *italic printed* article numbers (see page 139).

STM	= brass coated steel
STL	= cord wire, crimped
ROF	= stainless steel wire
SIC	= silicon carbide bristles
FIB	= fibre
PA	= polyamide

EAN

Satin Brushes

	D mm | *inch*	A mm | *inch*	H	d mm | *inch*	RPM max.	Pack.	**ROF 0.20** | *0.008"* Art.-No.	**SIC 80/1.2** Art.-No.	**STL 0.25** | *0.010"* Art.-No.	**FIB/PA 0.4** | *0.016"* Art.-No.
1	100 | *4*	12 | 1/2	21	19.2 | *3/4*	8,000	5	*320.341.19*	*320.821.19*	*320.703.19*	
2	100 | *4*	70 | *2 3/4*	23	19.2 | *3/4*	8,000	1	**323.348.19**	**323.828.19**	*323.704.19*	
	100 | *4*	100 | *4*	23	19.2 | *3/4*	8,000	1	*323.305.19*	*323.805.19*	*323.705.19*	*323.900.10*

	D mm | *inch*	A mm | *inch*	H	d mm | *inch*	RPM max.	Pack.	**STM 0.35** | *0.014"* Art.-No.	**SIC K 60/1.5** Art.-No.	**SIC 80/1.2** Art.-No.	**SIC K 120/1.1** Art.-No.
2	100 | *4*	120 | *4 3/4*	23	12.7 | *1/2*	8,000	1	*323.770.13*	*323.810.13*	*323.820.13*	*323.830.13*

Bore must be indicated in the order. Standard bore delivery ex stock, short termed. Other bores are available with extra charge: 1 - 10 pcs. EUR 5.00 / 11 - 25 pcs. EUR 3.00

3 Staple Set Wheel Brushes

D mm | *inch*	GL	BL	B	KD	RPM max.	Pack.	**SIC 46/1.6** Art.-No.	**SIC 60/1.5** Art.-No.	**SIC 80/1.2** Art.-No.	**SIC 120/1.10** Art.-No.
140 | *5 1/2*	58	40	M 14	80	2,500	1	*402.881*	*402.882*	**402.880**	*402.883*
140 | *5 1/2*	90	75	M 14	80	2,500	1	*402.891*	*402.892*	**402.890**	*402.893*

4 Staple Set Disc Brushes

Filling	DA mm | *inch*	KD mm | *inch*	BH	B/O	RPM max.	Pack.	Art.-No.
SIC 46/1.6	130 | *5 1/8*	20 | *3/4*	50 | *2*	M 14	2,500	1	*405.843*
SIC 60/1.5	130 | *5 1/8*	20 | *3/4*	50 | *2*	M 14	2,500	1	*405.844*
SIC 80/1.2	130 | *5 1/8*	20 | *3/4*	50 | *2*	M 14	2,500	1	**405.845**

Special Models

Band Saw Brushes
Wheel Brushes in circular saws or band saws are used for cleaning the chipping space. A wheel brush with diameter 80-100 mm is pressed against the saw blade (circular or band saw). By moving the saw blade or band the brush is rolling and it taking the chipping out of the shipping space. Hence a built-up edge is prevented and the durability of the saw blade extended. The used wheel brushes usually are with steel wire, corded wire or nylon filament. The brushes are suitable for all common machines.

Stripping Brushes
For the removal of laquer and other insulations from cables and electric equipment. The polished surface and the concentric running enable soft removal of laquer from the wires.

Stainless Steel Brushes
Information on working on stainless steel you find at www.lessmann.com

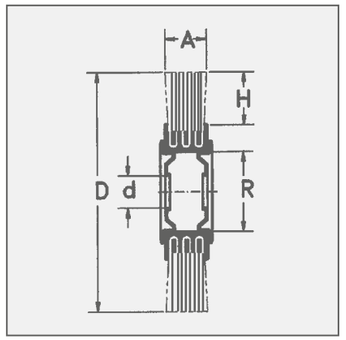

Item Nos. in bold are available ex stock.
Consider our minimum order value for *italic printed* article numbers (see page 139).

STA	= steel wire
STM	= brass coated steel
STL	= cord wire, crimped
PA	= polyamide

Band Saw Brushes

	Filling	D mm | *inch*	A mm | *inch*	H	d mm | *inch*	RPM max.	Pack.	Art.-No.
1	**PA** 0.50 | *0.020"*	85 | *3 1/4*	10 | *3/8*	14	12 | *1/2*	8,000	10	*300.091*
1	**PA** 0.50 | *0.020"*	100 | *4*	13 | *1/2*	21	12 | *1/2*	8,000	10	**320.001**
1	**PA** 0.50 | *0.020"*	100 | *4*	13 | *1/2*	21	13 | *1/2*	8,000	10	**320.004**
1	**PA** 0.80	100 | *4*	20-22 | *3/4*	23	12 | *1/2*	8,000	25	*323.002*
1	**PA** 0.80	100 | *4*	13 | *1/2*	21	12 | *1/2*	8,000	10	*320.003*
1	**PA** 1.0 | *0.040"*	125 | *5*	13 | *1/2*	33	13 | *1/2*	8,000	5	**330.001**
2	**STA** 0.20 | *0.008"*	80 | *3 1/4*	12 | *1/2*	20	10 | *3/8*	15,000	10	*312.141*
2	**STA** 0.30 | *0.012"*	100 | *4*	13 | *1/2*	21	12,7 | *1/2*	4,500	10	**320.161.12**
	STM 0.20 | *0.008"*	60 | *2 3/8*	10-12 | *3/8*	19	6 | *1/4*	15,000	10	*300.742*
	STM 0.20 | *0.008"*	80 | *3 1/4*	15 | *5/8*	27	6.8 | *1/4*	15,000	10	*311.742.01*
	STM 0.30 | *0.012"*	80 | *3 1/4*	15 | *5/8*	27	8 | *5/16*	15,000	10	**311.762**
	STL 4 x 0.25 | *0.010"*	80 | *3 1/4*	18-20 | *3/4*	27	6 | *1/4*	15,000	10	**310.702.06**

3 Stripping Brushes

D mm | *inch*	A mm | *inch*	d mm | *inch*	Pack.	**STA 0.10** | *0.004"* Art.-No.	**STA 0.15** | *0.006"* Art.-No.	**STA 0.20** | *0.008"* Art.-No.	**STA 0.25** | *0.010"* Art.-No.	**STA 0.30** | *0.012"* Art.-No.
30 | *1 1/4*	20 | *3/4*	6 | *1/4*	10	*301.213.10*	*301.213.15*	*301.213.20*		*301.213.30*
35 | *1 1/2*	20 | *3/4*	6 | *1/4*	10		*301.214.15*	*301.214.20*	available on demand	*301.214.30*
40 | *1 3/8*	25 | *1*	10 | *3/8*	10		*301.225.15*	*301.225.20*	*301.225.25*	*301.225.30*
80 | *3*	30 | *1 1/4*	16 | *5/8*	10			*301.236.20*	available on demand	*301.236.30*

Accessories

Adapters
With these adapters the bore can be reduced to the required size.
The wheel brushes are supplied with adapter sets which makes it possible to mount the brushes on all popular grinding machines.
The adapters have the following dimensions:

Set 1 / tube 30
30 / 1" / 22,2 / 20 / 16 / 1/2" / 12
Set 2 / tube 40:
40 / 32 / 1" / 22,2 / 20 / 16 / 1/2"
Set 3 / tube 50:
50 / 32 / 1" / 22,2 / 20 / 16 / 1/2"
Set 4 / tube 80 + 100:
brushes with metal discs, bore 50.8 and double keyway 7x13; plus adapter to bore 30. Further reduction possible with set 1.
Set 5 / tube 80 + 100:
brushes with metal discs, bore 50.8 and double keyway 7x13; plus adapter to bore 32. Further reduction possible with set 1.

A technical advice and safety information leaflet is included.

The practical adapter sets can also be ordered separately.

Single plastic reducing rings in many different dimensions can be supplied ex stock.

Drive Arbors
For use on drilling machines.

Metal Discs
Brushes with tube diameter 80 and 100 mm are supplied with our standard metal plates made of steel. Occasionally these metal plates are also required for brushes with smaller tubes. The metal plates on this page are therefore also suitable for the brushes on page 29 - 31. Please indicate the required bore size on your order and note that normally two metal plates are required for one brush.

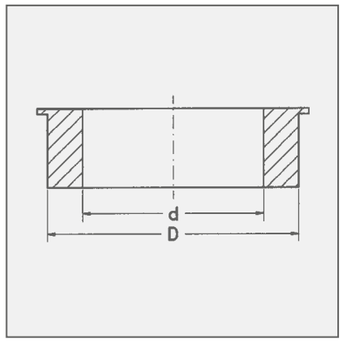

Item Nos. in bold are available ex stock.
Consider our minimum order value for *italic printed* article numbers (see page 139).

Adapter Sets

			D	d	Pack.	Art.-No.
1	Set 1	Tube 30	30	1" - 22.2 - 20 - 16 - 1/2" - 12	2	**000.886.63**
2	Set 2	Tube 40	40	32 - 1" - 22.2 - 20 - 16 - 1/2"	2	**000.886.64**
3	Set 3	Tube 50	50	32 - 1" - 22.2 - 20 - 16 - 1/2"	2	**000.886.65**
4	Set 4	Tube 80/100	50.8	30 (further adapters with Set 1)	2	**000.886.68**
	Set 5	Tube 80/100	50.8	32	2	**000.888.32**

5 Single plastic reducing rings in many different dimensions can be supplied ex stock.

EAN

Drive Arbors

6

D mm | *inch*	L mm | *inch*	Thread	Pack.	Art.-No.
6 | *1/4*	60 | *2 3/8*	M 10 x 1,5	1	**000.041**
10 | *3/8*	60 | *2 3/8*	M 10 x 1,5	1	**000.042**
10 | *3/8*	75 | *3*	M 14 x 2,0	1	**000.043**

7

D mm | *inch*	L mm | *inch*	Thread	Pack.	Art.-No.
6 | *1/4*	40 | *1 3/8*	M 10 left	1	**000.044**
6 | *1/4*	50 | *2*	M 12 left	1	**000.045**

8 Metal Discs as Spare Part

	Pack.	Art.-No.		Pack.	Art.-No.		Pack.	Art.-No.		Pack.	Art.-No.		Pack.	Art.-No.
R 30	2	*000.631*	R 40	2	*000.641*	R 50	2	*000.651*	R 80	2	*000.661*	R100*	2	*000.671*

Bore must be indicated!
* On request with double keyset 12 x 7 (50.8 / 52.9 / 54.5)

EAN

9 Thread Adapter

from	to	L mm | *inch*	Pack.	Art.-No.
Internal W 1/2	Internal M 12	40 | *1 3/8*	1	**001.211**
Internal W 1/2	Internal M 10	40 | *1 3/8*	1	**001.212**
Internal W 3/8	Internal M 10	40 | *1 3/8*	1	**001.215**
External M 10	Internal W 1/2	40 | *1 3/8*	1	**001.222**
External M 10	Internal W 3/8	40 | *1 3/8*	1	**001.225**

LESSMANN®
THE GERMAN BRUSH COMPANY

DEBURRING BRUSHES

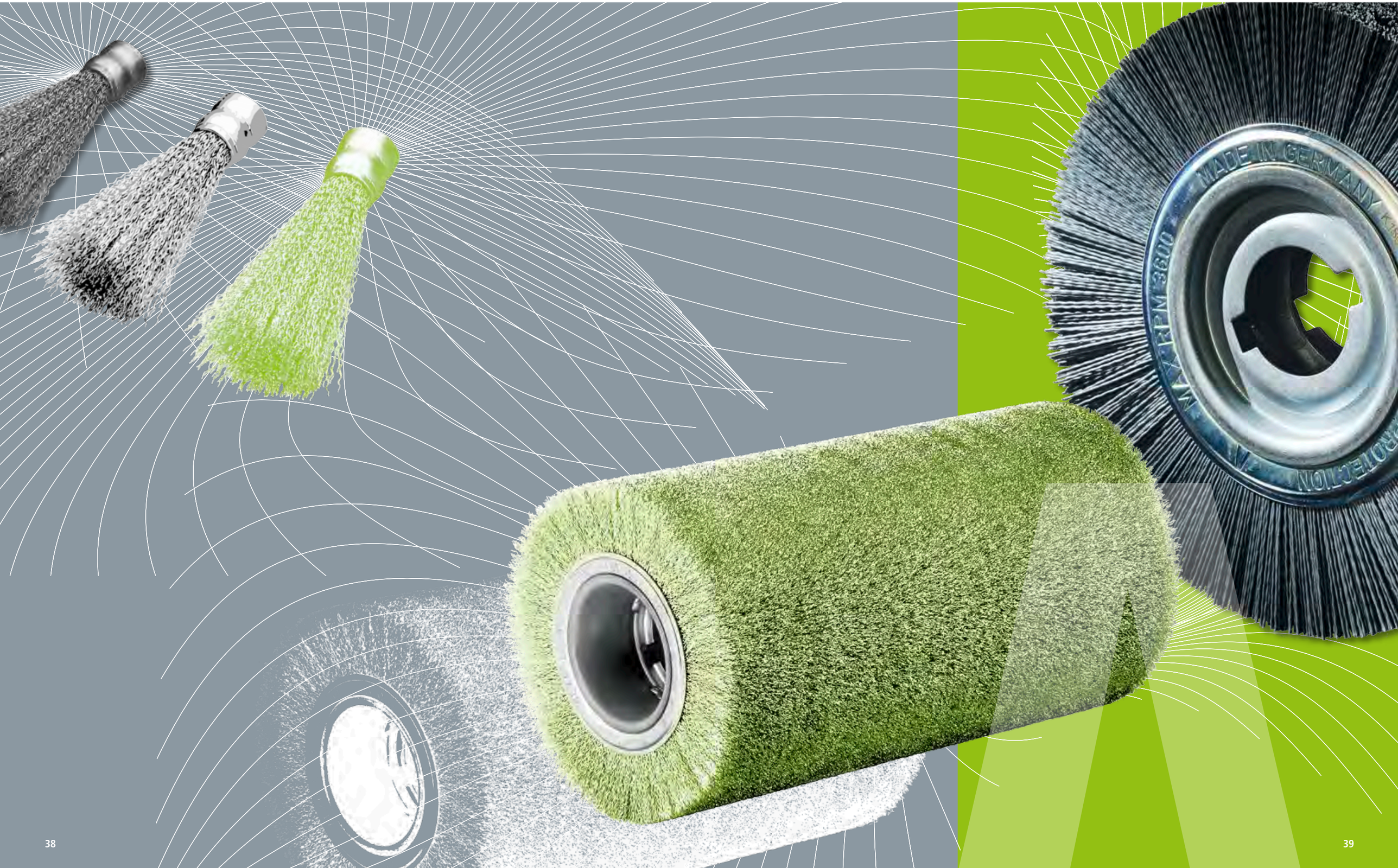

Deburring Brushes

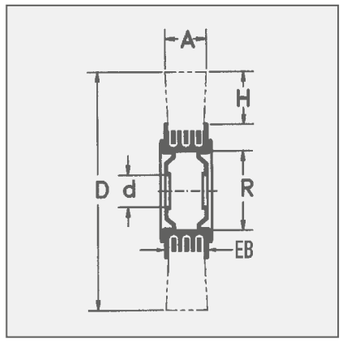

Deburring Brushes
Specially developed wheel brushes for deburring. These are suitable for all common deburring machines. Although they are heavier than other brushes because of their dense filling, we exclude any inbalance by evenly arranged filling material and the testing of every brush. Filled with high-quality wire, these brushes have a longer service life.

All brushes are with double keyway. Please indicate the required bore.

On the following pages you will find the standard measurements. Special measurements are available on request.

Deburring Brushes with Cord Wire STL / ROL
Deburring Brushes with cord wire are usually used for working on very hard materials. This wire construction gives the wires additional hold, hence the output of the brush is increased.

Encapsulated Deburring Brushes
Are ideal for an aggressive and very exact working. An early beak of the wires can be prevented. Therefore the brush has a longer life time and a better durability.

Stainless Steel Brushes
LESSMANN brushes with stainless steel wire have green site plates.
More information for brush applications on stainless materials you will find at www.lessmann.com

For more information about deburring please ask for our leaflet "Deburring with brushes".

Item Nos. in bold are available ex stock.
Consider our minimum order value for *italic printed* article numbers (see page 139).

STH = steel wire, high tensile
STM = brass coated steel
STL = cord wire, crimped

1 2

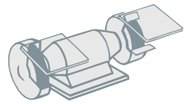

EAN **1 Deburring Brushes, Steel Wire**

D mm | *inch*	A mm | *inch*	EB	R mm | *inch*	H mm | *inch*	d Stand.	RPM max.	Pack.	**STH 0.20** | *0.008"* Art.-No.	**STH 0.35** | *0.014"* Art.-No.	**STH 0.50** | *0.020"* Art.-No.
250 | *10*	60 | *2 3/8*	58	100 | *4*	50 | *2*	50.8	3,600	1	**377.051**	**377.053**	**377.054**
250 | *10*	60 | *2 3/8*	55	100 | *4*	50 | *2*	100	3,600	1	*377.051.00*	*377.053.00*	*377.054.00*
250 | *10*	60 | *2 3/8*	53	100 | *4*	50 | *2*	50.8	3,600	1	*377.051.T1*	*377.053.T1*	*377.054.T1*
250 | *10*	60 | *2 3/8*	50	100 | *4*	50 | *2*	100	3,600	1	*377.051.TA*	**377.053.TA**	*377.054.TA*
250 | *10*	80 | *3 1/4*	79	100 | *4*	50 | *2*	50.8	3,600	1	*377.052*	*377.095*	*377.077*
250 | *10*	100 | *4*	99	100 | *4*	50 | *2*	50.8	3,600	1	*377.059*	*377.066*	*377.096*
300 | *12*	60 | *2 3/8*	49	100 | *4*	60 | *2 3/8*	50.8	3,000	1	*387.051*	*387.053*	*387.054*
300 | *12*	100 | *4*	93	100 | *4*	60 | *2 3/8*	50.8	3,000	1	available on demand	*387.055*	available on demand

EAN **2 Deburring Brushes, Cord Wire, Brass Coated Steel Wire**

D mm | *inch*	A mm | *inch*	EB	R mm | *inch*	H mm | *inch*	d Stand.	RPM max.	Pack.	**STL 0.38** | *0.015"* Art.-No.	**STM 0.38** | *0.015"* Art.-No.
250 | *10*	60 | *2 3/8*	58	100 | *4*	50 | *2*	50.8	3,600	1	**377.043**	*377.063*
250 | *10*	60 | *2 3/8*	55	100 | *4*	50 | *2*	100	3,600	1	*377.043.00*	*377.063.00*
250 | *10*	60 | *2 3/8*	53	100 | *4*	50 | *2*	50.8	3,600	1	*377.043.T1*	*377.063.T1*
250 | *10*	60 | *2 3/8*	50	100 | *4*	50 | *2*	100	3,600	1	*377.043.TA*	*377.063.TA*
250 | *10*	80 | *3 1/4*	79	100 | *4*	50 | *2*	50.8	3,600	1	*377.045*	available on demand
250 | *10*	100 | *4*	99	100 | *4*	50 | *2*	50.8	3,600	1	*377.048*	available on demand

All brushes with metal disc and bore 50.8 mm and double keyway 13 x 7 mm!
Further standard bores: 52.9 / 54.5 mm; d min/max: 30 mm ≤ d ≤ R; Deburring Brushes also available with tube 120.

Deburring Brushes

1 2 3 4

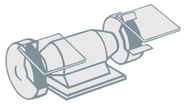

Deburring Brushes, Stainless Steel Wire

D mm | *inch*	A mm | *inch*	EB	R	H	d Stand.	RPM max.	Pack.	1 ROH 0.20 | *0.008"* Art.-No.	1 ROH 0.35 | *0.014"* Art.-No.	1 ROH 0.50 | *0.020"* Art.-No.	2 ROL 0.35 | *0.014"* Art.-No.
250 | *10*	60 | *2 3/8*	58	100	50	50.8	3,600	1	*377.044*	**377.089**	*377.094*	**377.707**
250 | *10*	60 | *2 3/8*	55	100	50	100	3,600	1	*377.044.00*	*377.089.00*	*377.094.00*	*377.707.00*
250 | *10*	60 | *2 3/8*	53	100	50	50.8	3,600	1	*377.044.T1*	*377.089.T1*	*377.094.T1*	*377.707.T1*
250 | *10*	60 | *2 3/8*	50	100	50	100	3,600	1	*377.044.TA*	*377.089.TA*	*377.094.TA*	*377.707.TA*
250 | *10*	80 | *3 1/4*	79	100	50	50.8	3,600	1	*377.047*	*377.090*	*377.097*	available on demand
250 | *10*	100 | *4*	99	100	50	50.8	3,600	1	*377.049*	*377.093*	*377.099*	available on demand
300 | *12*	100 | *4*	95	100	60	50.8	3,000	1	available on demand	available on demand	available on demand	available on demand

All brushes with metal disc and bore 50.8 mm and double keyway 13 x 7 mm!
Further standard bores: 52.9 / 54.5 mm; d min/max: 30 mm ≤ d ≤ R; Deburring Brushes also available with tube 120.

Deburring Brushes, encapsulated

D mm | *inch*	A mm | *inch*	R	H	d Stand.	Pack.	3 STH 0.20 | *0.008"* Art.-No.	3 STH 0.35 | *0.014"* Art.-No.	4 ROH 0.20 | *0.008"* Art.-No.	4 ROH 0.35 | *0.014"* Art.-No.
250 | *10*	13 | *1/2*	100	58	33	1	*370.241.KG*	**370.271.KG**	**370.441.KG**	**370.471.KG**
250 | *10*	20 | *3/4*	100	57	33	1	*370.242.KG*	*370.272. KG*	**370.442.KG**	**370.472.KG**

2 1

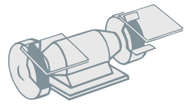

1 Deburring Brushes, Silicon Carbide Bristles

D mm | *inch*	A mm | *inch*	EB	R mm | *inch*	H mm | *inch*	d Stand.	RPM max.	Pack.	SIC 80/1.2 Art.-No.	SIC 120/1.1 Art.-No.	SIC 180/1.0 Art.-No.	SIC 320/0.56 Art.-No.
250 | *10*	60 | *2 3/8*	58	100 | *4*	50 | *2*	50.8	3,600	1	*377.824*	**377.835**	**377.854**	*377.875*
250 | *10*	60 | *2 3/8*	55	100 | *4*	50 | *2*	100	3,600	1	*377.824.00*	*377.835.00*	*377.854.00*	*377.875.00*
250 | *10*	60 | *2 3/8*	53	100 | *4*	50 | *2*	50.8	3,600	1	*377.824.T1*	*377.835.T1*	*377.854.T1*	*377.875.T1*
250 | *10*	60 | *2 3/8*	50	100 | *4*	50 | *2*	100	3,600	1	*377.824.TA*	*377.835.TA*	*377.854.TA*	*377.875.TA*
250 | *10*	80 | *3 1/4*	79	100 | *4*	50 | *2*	50.8	3,600	1	available on demand	*377.837*	available on demand	available on demand
250 | *10*	100 | *4*	99	100 | *4*	50 | *2*	50.8	3,600	1	available on demand	*377.839*	available on demand	available on demand
300 | *12*	60 | *2 3/8*	55	100 | *4*	60 | *2 3/8*	50.8	3,000	1	*387.824*	available on demand	available on demand	available on demand
300 | *12*	100 | *4*	95	100 | *4*	60 | *2 3/8*	50.8	3,000	1	available on demand	available on demand	available on demand	available on demand

2 Deburring Brushes, mixed filament

D mm | *inch*	A mm | *inch*	EB	R mm | *inch*	H mm | *inch*	d Stand.	RPM max.	Pack.	ROH 0.20 - SIC 120 Mixed filament with mixing proportion 1:1 Art.-No.
250 | *10*	60 | *2 3/8*	58	100 | *4*	50 | *2*	50.8	3,600	1	*377.091*
250 | *10*	60 | *2 3/8*	55	100 | *4*	50 | *2*	100	3,600	1	*377.091.00*

All brushes with metal disc and bore 50.8 mm and double keyway 13 x 7 mm!
Further standard bores: 52.9 / 54.5 mm; d min/max: 30 mm ≤ d ≤ R; Deburring Brushes also available with tube 120.

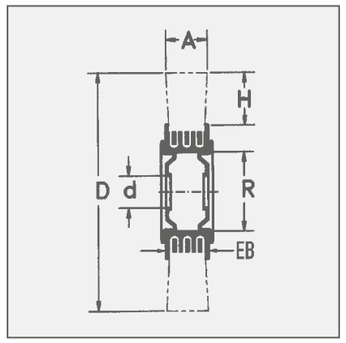

Item Nos. in bold are available ex stock.
Consider our minimum order value for *italic printed* article numbers (see page 139).

STH = steel wire, high tensile
ROL = stainless steel, cord wire
ROH = stainless steel wire, high tensile
SIC = silicon carbide bristles

Roller Brushes

Roller Brushes
Roller Brushes for the use in deburring machines. For Deburring e.g. cutting edges of tubes.
As filling material you can choose from steel and stainless steel wire, brass coated steel wire or cord wire. These brushes feature with their dense filling.

Roller Brushes
Deburring brushes are available with
D = 250 - 400 mm and
A = 55 - 700 mm

In your inquiry please indicate measure D, A and the bore e. g. 50.8 mm, 52.9 mm or 54.5 mm with double keyway 13 x 7 mm. Other bores up to 120 mm are available on demand.

Moreover we offer with our welded metal plate special collets for the roller brushes. Bores and keyways will be produced customized.

Note: Due to our advanced manufacturing technology it is possible to produce balanced roller brushes without balancing weights. Hence the brush has a steady run throughout its whole lifetime.

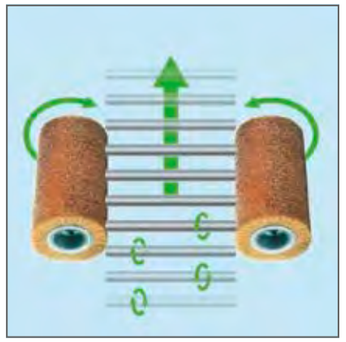

Function chart of a deburring machine with roller brushes

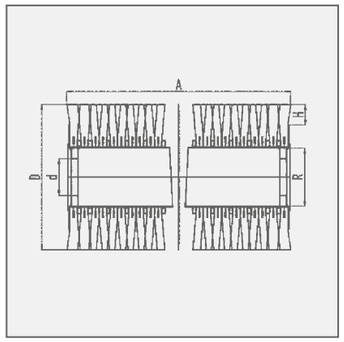

Item Nos. in bold are available ex stock.
Consider our minimum order value for *italic printed* article numbers (see page 139).

STH = steel wire, high tensile
STL = cord wire, crimped
ROH = stainless steel wire, high tensile
SIC = silicon carbide bristles

Strip brushes for deburring machines you find on pages 136 - 137.

Roller Brushes, Steel Wire

D mm | *inch*	A mm | *inch*	R mm | *inch*	H mm | *inch*	d Stand.	RPM max.	Pack.	**STH 0.20** | *0.008"* Art.-No.	**STH 0.35** | *0.014"* Art.-No.	**STH 0.50** | *0.020"* Art.-No.	**STL 0.38** | *0.015"* Art.-No.
250 | *10*	300 | *12*	100 | *4*	50 | *2*	100	3,600	1	*377.240.30*	*377.270.30*	*377.290.30*	*377.780.30*
250 | *10*	460 | *18*	100 | *4*	50 | *2*	100	3,600	1	*377.240.46*	*377.270.46*	*377.290.46*	*377.780.46*
250 | *10*	600 | *24*	100 | *4*	50 | *2*	100	3,600	1	*377.240.60*	*377.270.60*	*377.290.60*	*377.780.60*
300 | *12*	460 | *18*	100 | *4*	60 | *2 3/8*	100	3,000	1	*387.240.46*	*387.270.46*	*387.290.46*	*387.780.46*
300 | *12*	460 | *18*	120 | *4 3/4*	50 | *2*	120	3,000	1	*388.240.46*	*388.270.46*	*388.290.46*	*388.780.46*
300 | *12*	600 | *24*	120 | *4 3/4*	50 | *2*	120	3,000	1	*388.240.60*	*388.270.60*	*388.290.60*	*388.780.60*

Roller Brushes, Stainless Steel, Abrasive Bristles

D mm | *inch*	A mm | *inch*	R mm | *inch*	H mm | *inch*	d Stand.	RPM max.	Pack.	**ROH 0.20** | *0.008"* Art.-No.	**ROH 0.35** | *0.014"* Art.-No.	**ROH 0.50** | *0.020"* Art.-No.	**SIC 120 / 1.1** Art.-No.
250 | *10*	300 | *12*	100 | *4*	50 | *2*	100	3,600	1	*377.440.30*	*377.470.30*	*377.490.30*	*377.830.30*
250 | *10*	460 | *18*	100 | *4*	50 | *2*	100	3,600	1	*377.440.46*	*377.470.46*	*377.490.46*	*377.830.46*
250 | *10*	600 | *24*	100 | *4*	50 | *2*	100	3,600	1	*377.440.60*	*377.470.60*	*377.490.60*	*377.830.60*
300 | *12*	460 | *18*	100 | *4*	60 | *2 3/8*	100	3,000	1	*387.440.46*	*387.470.46*	*387.490.46*	*387.830.46*
300 | *12*	460 | *18*	120 | *4 3/4*	50 | *2*	120	3,000	1	*388.440.46*	*388.470.46*	*388.490.46*	*388.830.46*
300 | *12*	600 | *24*	120 | *4 3/4*	50 | *2*	120	3,000	1	*388.440.60*	*388.470.60*	*388.490.60*	*388.830.60*

Other measurements and filling materials as well as collets in special measurements are available on request.

Deburring End Brushes

Deburring End Brushes
These brushes are perfect for deburring tubes, profiles or even plane surfaces. Deburring end brushes are used in a set of 8, 16 or 24 single end brushes integrated in one deburring device.

The metal bush fits all standard collets.

Stainless Steel
Information on working on stainless steel material you find at. www.lessmann.com

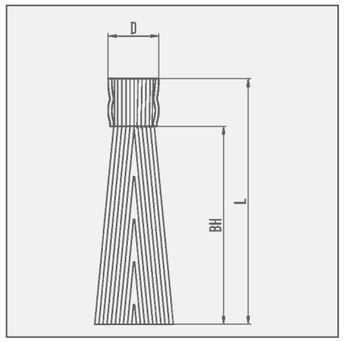

Item Nos. in bold are available ex stock.
Consider our minimum order value for *italic printed* article numbers (see page 139).

STH = steel wire, high tensile
STL = cord wire, crimped
ROH = stainless steel wire, high tensile
SIC = silicon carbide bristles

1 Deburring End Brushes, Steel Wire

D mm | *inch*	L mm | *inch*	BH mm | *inch*	Pack.	**STH 0.20** | *0.008"* Art.-No.	**STH 0.35** | *0.014"* Art.-No.	**STH 0.50** | *0.020"* Art.-No.
25 | *1*	120 | *4 3/4*	95 | *3 1/2*	16	**048.241**	**048.271**	**048.291**

2 Deburring End Brushes, CordWire

D mm | *inch*	L mm | *inch*	BH mm | *inch*	Pack.	**STL 0.35** | *0.014"* Art.-No.	**STL 0.38** | *0.015"* Art.-No.
25 | *1*	120 | *4 3/4*	95 | *3 1/2*	16	**048.701**	*048.081*

3 Deburring End Brushes, Stainless Steel Wire

D mm | *inch*	L mm | *inch*	BH mm | *inch*	Pack.	**ROH 0.20** | *0.008"* Art.-No.	**ROH 0.35** | *0.014"* Art.-No.	**ROH 0.50** | *0.020"* Art.-No.
25 | *1*	120 | *4 3/4*	95 | *3 1/2*	16	**048.441**	**048.471**	**048.491**

Deburring End Brushes, Silicon Carbide Bristles, mixed wire

				4			5
D mm | *inch*	L mm | *inch*	BH mm | *inch*	Pack.	**SIC 80 / 1.2** Art.-No.	**SIC 120 / 1.1** Art.-No.	**SIC 180 / 1.0** Art.-No.	**SIC 120 / 1.1 - ROH 0.20** Art.-No.
25 | *1*	120 | *4 3/4*	95 | *3 1/2*	16	**048.821**	**048.841**	**048.851**	**048.901***
25 | *1*	120 | *4 3/4*	95 | *3 1/2*	16				**048.941****

* Mixing proportion 1:1 | ** Mixing proportion 2:1

Brush Adapter for deburring end brushes

Suitable for all common deburring machines	Art.-No
Device for 12 End Brushes	available on demand
Device for 16 End Brushes	*048.999*
Device for 24 End Brushes	*048.998*

LESSMANN®
THE GERMAN BRUSH COMPANY

CUP AND BEVEL BRUSHES

Cup Brushes

Cup Brushes
Knot cup brushes are for heavy duty use: for the preparing of metal surfaces before painting, the removal of slag, rust, scale or concrete waste.
The brushes diameter 80/100/125 mm (Art. No. 484/486/487) have a **bridle** fitted for stability. The bridle can be removed after wear of the wire exposing a further 20 mm of useable wire!

We recommend the use of our brush with diameter 90 mm for small angle grinders. Compared to the common brush with diameter 65 mm this model has 50% more wire and it is really something special in the brush market!

Knot Cup Brushes with extra long filling
For the use on large areas and for a flexible cleaning and derusting of e.g. shipyards. For a use in angle grinders. Easy working also in areas which are hard to reach.

Cup Brushes, left-right knotted
Left-right knotted cup brushes usually are more aggressive, hence they are often used for heavy brushing operations.
Besides the knots open less, therefore they are ideal for the treatment of edges.

Cup Brushes
Cup brushes with crimped wire are ideal for working on large surfaces with angle grinders. They can also be used for the removal of rust, paint, dirt or scale and for polishing.

Special Designs
The cup brushes can be delivered with different filling materials according to your requirements e. g. brushes with brass cups and brass wire for non-sparkling applications.

For promoting sales all standard wheel brushes are packed individually for self display. They are also available in bulk.

Stainless Steel Brushes
LESSMANN brushes with stainless steel wire have green cups. More information for brush applications on stainless materials you will find at www.lessmann.com

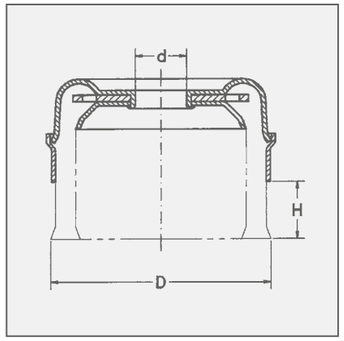

Chunky packaging
Many articles you receive as standard in handy covering boxes (10 pieces per carton).

Item Nos. in bold are available ex stock.
Consider our minimum order value for *italic printed* article numbers (see page 139).

STH = steel wire, high tensile

EAN **Knot Cup Brushes without Bridle, 1 Row, Steel Wire**

	D mm | *inch*	d	H mm | *inch*	Z	RPM max.	Pack.	**STH 0.35** | *0.014"* Art.-No.	**STH 0.50** | *0.020"* Art.-No.	**STH 0.80** | *0.031"* Art.-No.
1	65 | *2 1/2*	M 10 x 1.5	20 | *3/4*	18	12,500	1	**482.114***	**482.214***	available on demand
1	65 | *2 1/2*	M 14 x 2.0	20 | *3/4*	18	12,500	1	**482.117***	**482.217***	**482.317***
1	75 | *3*	M 14 x 2.0	20 | *3/4*	20	12,500	1	**483.117***	**483.217***	*483.317*
1	90 | *3 1/2*	M 14 x 2.0	22 | *7/8*	20	11,500	1	*485.137**	**485.237***	*485.337*
1	100 | *4*	M 14 x 2.0	25 | *1*	26	9,000	1	available on demand	**486.237***	available on demand
1	125 | *5*	M 14 x 2.0	25 | *1*	32	7,000	1	available on demand	**487.237**	available on demand
1	150 | *6*	M 14 x 2.0	30 | *1 1/4*	36	6,600	1	available on demand	**488.237**	available on demand
1	150 | *6*	W 5/8 x 11 NC	30 | *1 1/4*	36	6,600	1	available on demand	*488.238*	available on demand
2	65 | *2 1/2*	M 14 x 2.0	20 | *3/4*	18	12,500	1	available on demand	**482.217.WZ***	

EAN **3 Knot Cup Brushes, without Bridle, 1 Row, Steel Wire, with extra long filling**

D mm | *inch*	d	H mm | *inch*	Z	RPM max.	Pack.	**STH 0.35** | *0.014"* Art.-No.	**STH 0.50** | *0.020"* Art.-No.
80 | *3 1/4*	M 14 x 2.0	33 | *1 1/4*	18	12,500	25	**480.117**	*480.217*

EAN **4 Knot Cup Brushes without Bridle, 2 Rows, Steel Wire**

D mm | *inch*	d	H mm | *inch*	Z	RPM max.	Pack.	**STH 0.35** | *0.014"* Art.-No.	**STH 0.50** | *0.020"* Art.-No.	**STH 0.80** | *0.031"* Art.-No.
100 | *4*	W 5/8 x 11 NC	25 | *1*	26+20	9,000	1	*486.148*	*486.248*	*486.348*
125 | *5*	W 5/8 x 11 NC	25 | *1*	32+26	7,000	1	available on demand	*487.248*	available on demand
150 | *6*	W 5/8 x 11 NC	25 | *1*	36+32	6,600	1	available on demand	*488.248*	available on demand

* Packed 10 pieces per carton

Cup Brushes

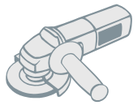

Knot Cup Brushes with Bridle, 1 Row, Steel Wire

D mm | *inch*	d mm | *inch*	H mm | *inch*	Z	RPM max.	Pack.	**STH 0.35** | *0.014"* Art.-No.	**STH 0.50** | *0.020"* Art.-No.	**STH 0.80** | *0.031"* Art.-No.
80 | *3 1/4*	22.2 | *7/8*	25 | *1*	20	9,000	1	*484.111*	*484.211**	**484.311***
80 | *3 1/4*	M 14 x 2.0	25 | *1*	20	9,000	1	**484.117***	**484.217***	**484.317***
80 | *3 1/4*	W 5/8 x 11 NC	25 | *1*	20	9,000	1	*484.118*	**484.218**	*484.318*
100 | *4*	22.2 | *7/8*	23 | *7/8*	26	9,000	1	**486.111**	**486.211***	**486.311***
100 | *4*	M 14 x 2.0	23 | *7/8*	26	9,000	1	**486.117***	**486.217***	**486.317***
100 | *4*	W 5/8 x 11 NC	23 | *7/8*	26	9,000	1	*486.118*	**486.218***	*486.318**
125 | *5*	22.2 | *7/8*	25 | *1*	32	7,000	1	*487.111*	**487.211**	**487.311**
125 | *5*	M 14 x 2.0	25 | *1*	32	7,000	1	**487.117**	**487.217**	**487.317**
125 | *5*	W 5/8 x 11 NC	25 | *1*	32	7,000	1	*487.118*	**487.218**	*487.318*

* Packed 10 pieces per carton

After removing the bridle there are the following further trimming lengths :
Ø 80 und 125: 15 mm / 5/8 inch
Ø 100: 12.5 mm / 1/2 inch

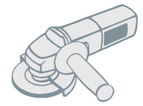

Knot Cup Brushes without Bridle, 1 Row, Stainless Steel Wire

	D mm | *inch*	d	H mm | *inch*	Z	RPM max.	Pack.	**ROH 0.35** | *0.014"* Art.-No.	**ROH 0.50** | *0.020"* Art.-No.
1	65 | *2 1/2*	M 10 x 1.5	20 | *3/4*	18	12,500	1	*482.714*	*482.814**
1	65 | *2 1/2*	M 14 x 2.0	20 | *3/4*	18	12,500	1	**482.717***	**482.817***
1	75 | *3*	M 14 x 2.0	20 | *3/4*	20	12,500	1	available on demand	*483.817**
1	80 | *3 1/4*	M 14 x 2.0	33 | *1 1/4*	18	15,500	25	**480.717**	available on demand
2	65 | *2 1/2*	M 14 x 2.0	20 | *3/4*	18	12,500	1	available on demand	**482.817.WZ***

3 Knot Cup Brushes with Bridle, 1 Row, Stainless Steel Wire

D mm | *inch*	d mm | *inch*	H mm | *inch*	Z	RPM max.	Pack.	**ROH 0.35** | *0.014"* Art.-No.	**ROH 0.50** | *0.020"* Art.-No.
80 | *3 1/4*	22.2 | *7/8*	25 | *1*	20	9,000	1	*484.711*	*484.811*
80 | *3 1/4*	M 14 x 2.0	25 | *1*	20	9,000	1	**484.717**	**484.817***
80 | *3 1/4*	W 5/8 x 11 NC	25 | *1*	20	9,000	1	*484.718*	*484.818*
100 | *4*	22.2 | *7/8*	23 | *7/8*	26	9,000	1	**486.711**	*486.811*
100 | *4*	M 14 x 2.0	23 | *7/8*	26	9,000	1	**486.717***	**486.817***
100 | *4*	W 5/8 x 11 NC	23 | *7/8*	26	9,000	1	*486.718*	*486.818*
125 | *5*	M 14 x 2.0	23 | *7/8*	32	9,000	1	available on demand	*487.817*

* Packed 10 pieces per carton

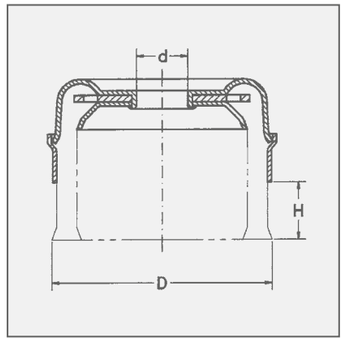

Item Nos. in bold are available ex stock.
Consider our minimum order value for *italic printed* article numbers (see page 139).

STH = steel wire, high tensile

ROH = stainless steel wire, high tensile

Cup Brushes

Cup Brushes with Crimped Wire

D mm | *inch*	d mm | *inch*	H	RPM max.	Pack.	1 STA 0.20 | *0.008"* Art.-No.	1 STA 0.35 | *0.014"* Art.-No.	1 STA 0.50 | *0.020"* Art.-No.	2 ROH 0.30/0.35|*0.012"* Art.-No.	3 MES 0.30 | *0.012"* Art.-No.
60 | *2 3/8*	M 10 x 1,5	20	12,000	1		**421.164***		*421.364*	*421.564*
60 | *2 3/8*	M 14 x 2.0	20	12,000	1	**421.147**	**421.167***	**421.197**	**421.367***	**421.567***
75 | *3*	M 14 x 2.0	25	12,500	1		**423.167***	available on demand	**423.367***	available on demand
75 | *3*	W 5/8 x 11 NC	25	12,500	1		**423.168***	available on demand	*423.368*	available on demand
80 | *3 1/4*	22.2 | *7/8*	25	8,500	1		**424.171***	available on demand	*424.361*	available on demand
80 | *3 1/4*	M 14 x 2.0	25	8,500	1	**424.147**	**424.177***	**424.197**	**424.367***	**424.567**
80 | *3 1/4*	W 5/8 x 11 NC	25	8,500	1		*424.178*	*424.198*	*424.368*	available on demand
100 | *4*	22.2 | *7/8*	30	9,000	1		**426.171***	*426.191*	*426.361*	*426.561*
100 | *4*	M 14 x 2.0	30	9,000	1	**426.147***	**426.177***	**426.197***	**426.367***	**426.567**
100 | *4*	W 5/8 x 11 NC	30	9,000	1		**426.178***	*426.198*	*426.368*	*426.568*
125 | *5*	22.2 | *7/8*	30	8,000	1		**427.171**	available on demand	available on demand	available on demand
125 | *5*	M 14 x 2.0	30	8,000	1		**427.177**	**427.297**	**427.367***	**427.567***
125 | *5*	W 5/8 x 11 NC	30	8,000	1		**427.178**	*427.298*		
150 | *6*	22.2 | *7/8*	40	6,500	1		**429.171**	*429.191*		
150 | *6*	M 14 x 2.0	40	6,500	1		**429.177**	**429.197**	**429.367**	
150 | *6*	W 5/8 x 11 NC	40	6,500	1		**429.178**	*429.198*		

Cup Brushes, Brass Coated Steel Wire, Abrasive Filament

D mm | *inch*	d	H	RPM max.	Pack.	STL 0.35 | *0.014"* Art.-No.	STM 0.30 | *0.012"* Art.-No.	4 SIC 80/1.2 Art.-No.	4 SIC 180/0.9 Art.-No.
65 | *2 3/8*	M 14 x 2.0	20	12,000	1		**421.767**	**421.827**	*421.857*
100 | *4*	22.2 | *7/8*	30	9,000	1	*426.701*			
100 | *4*	M 14 x 2.0	30	9,000	1	*426.707*	**426.767**		

* Packed 10 pieces per carton

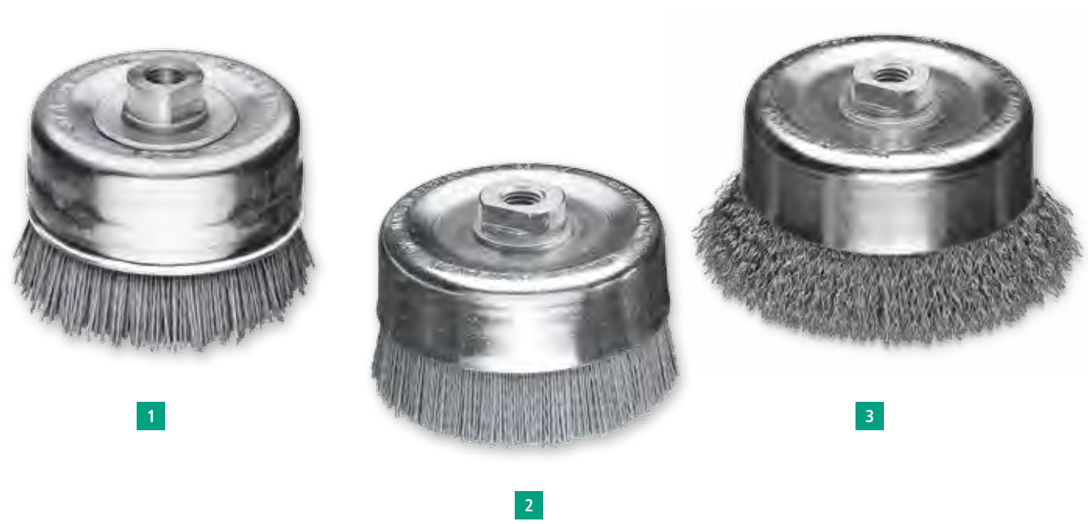

Cup Brushes, Straight Filament

	D mm | *inch*	d mm | *inch*	H	RPM max.	Pack.	STH 0.35 | *0.014"* Art.-No.	STM 0.35 | *0.014"* Art.-No.	STL 0.35 Art.-No.	SIC 80/1.2 Art.-No.	SIC K180/1.0 Art.-No.
1	90 | *3 1/2*	M 14	25	9,000	1				*446.827**	***446.857****
1	90 | *3 1/2*	22.2 | *7/8*	25	9,000	1				available on demand	*446.851**
3	100 | *4*	M 14	30	9,000	1	*446.277**	*446.777**			
3	100 | *4*	22.2 | *7/8*	30	9,000	1	*446.271**	*446.771**	*446.701**		
2	110 | *4 1/2*	M 14	30	7,000	1				**447.827***	**447.857***
3	125 | *5*	M 14	30	7,000	1	**447.277***	available on demand	available on demand		

1 with bridle | * Packed 10 pieces per carton

Cup Brushes with Straight Wire
They are used for deburring surfaces, mostly in machining centers. The brushes are available with steel wire, stainless steel wire, abrasive nylon or any other filament. Due to the straight cup the filament of the brush is less flaring out and more cone points of the bristles work on the surface. Please contact us for more information!

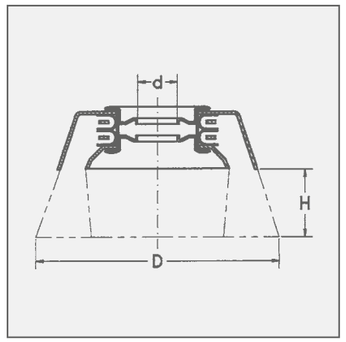

Item Nos. in bold are available ex stock.
Consider our minimum order value for *italic printed* article numbers (see page 139).

STA = steel wire
STH = steel wire, high tensile
STM = brass coated steel
STL = cord wire, crimped
ROH = stainless steel wire, high tensile
MES = brass wire
SIC = silicon carbide bristles

Bevel Brushes

Bevel Brushes
The special shape of these brushes enables the user to work in hard to reach places. The knots are left hand twisted to increase stability. For promoting sales all standard knot bevel brushes are packed individually for self display. These brushes are also available bulk packed.

Wheel Brushes with thread
Like bevel brushes, wheel brushes with a thread are ideal for working in areas which are hard to reach. Usually the brushes are used on angle grinders.

Other measurements and filling materials are available on request.

Stainless Steel Brushes
LESSMANN brushes with stainless steel wire have green cups. We use wire with material number 1.4310. Material number 1.4401 can be used on request.
More information for brush applications on stainless materials you will find at www.lessmann.com

Bevel Brushes, left-right knotted
Left-right knotted bevel brushes usually are more aggressive, hence they are often used for heavy brushing operations.
Besides the knots open less, therefore there are ideal for the treatment of edges.

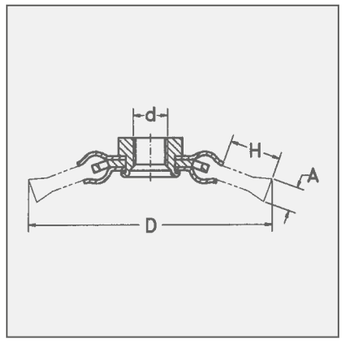

Item Nos. in bold are available ex stock.
Consider our minimum order value for *italic printed* article numbers (see page 139).

STA	= steel wire
STM	= brass coated steel
STH	= steel wire, high tensile
ROF	= stainless steel wire
ROH	= stainless steel wire, high tensile

EAN

Knot Bevel Brushes, Steel Wire, Stainless Steel Wire

	D mm | *inch*	A mm | *inch*	d mm | *inch*	H	Z	RPM max.	Pack.	1 STH 0.35 | *0.014"* Art.-No.	1 STH 0.50 | *0.020"* Art.-No.	2 ROH 0.35 | *0.014"* Art.-No.	2 ROH 0.50 | *0.020"* Art.-No.
	100 | *4*	12 | *1/2*	M 10 x 1.5	20	18	15,000	1		**471.254**		
	100 | *4*	12 | *1/2*	M 14 x 2.0	20	18	15,000	1	**471.157**	**471.257***	**471.757**	**471.857***
	100 | *4*	12 | *1/2*	22.2 | *7/8*	20	18	15,000	1		**471.251**		
	115 | *4 1/2*	12 | *1/2*	M 14 x 2.0	24	20	15,000	1	**472.157**	**472.257***	**472.757**	**472.857***
	115 | *4 1/2*	12 | *1/2*	22.2 | *7/8*	24	20	15,000	1		**472.251**		
	115 | *4 1/2*	12 | *1/2*	M 14 x 2.0	24	24	15,000	1		**472.257.V4**		
3	115 | *4 1/2*	12 | *1/2*	M 14 x 2.0	24	20	15,000	1		**472.257.WZ***		**472.857.WZ***

EAN

Bevel Brushes, Crimped Wire

D mm | *inch*	A mm | *inch*	d	H	RPM max.	Pack.	4 STA 0.35 | *0.014"* Art.-No.	ROF 0.30 | *0.012"* Art.-No.	5 STM 0.30 | *0.012"* Art.-No.
100 | *4*	10 | *3/8*	M 14 x 2.0	20	15,000	1	**422.177***	**422.367***	**422.767**

EAN

6 Wheel Brushes, crimped wire, with thread

D mm | *inch*	A mm | *inch*	d	H	RPM max.	Pack.	ROF 0.30 | *0.012"* Art.-No.	STM 0.30 | *0.012"* Art.-No.
115 | *4 1/2*	12 | *1/2*	M 14	24	8,000	1	*304.361.14*	**304.761.14**
125 | *5*	13 | *1/2*	M 14	19.5	6,000	1	**335.361.14**	**335.761.14**

* Packed 10 pieces per carton

Brushes for grass trimmers

Brushes for grass trimmers
Knotted brushes on grass trimmers are ideal for removing weeds on grass pavers, curb-stones, cobbled areas or other spots which are hard to reach. Those brushes clean larger areas like courtyards, terraces or longer alleys effortless and sustainable.

Besides, brushes are ecologically friendly and they remove weeds fast and effectively.

Attention: When working with brushes on grass trimmers, please be aware of stringent safety rules. Please take note of the data sheet we attach the brushes or have a look at www.lessmann.com.

Right adaption of the brush

Wheel Brushes

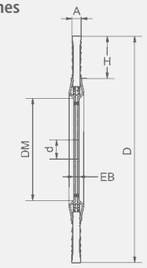

ZF = Knot type
Z = number of knots, R = number of rows

Bevel Brushes

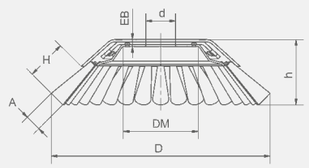

Item Nos. in bold are available ex stock.
Consider our minimum order value for *italic printed* article numbers (see page 139).

STH = steel wire, high tensile

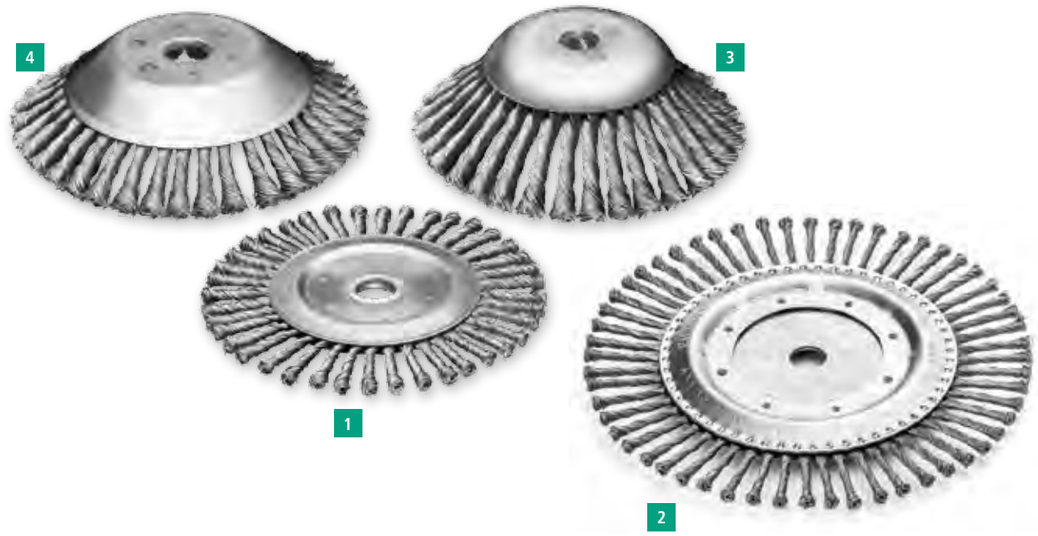

Knotted Wheel Brushes, for grass trimmers

	D mm | *inch*	A mm | *inch*	EB	DM	H mm | *inch*	Z	d mm | *inch*	ZF	RPM max.	Pack.	**STH 0.50** | *0.020"* Art.-No.
1	175 | *6 7/8*	6 | *1/4*	8	68	34 | *1 1/4*	40	20 | *3/4*	B	12,500	1	**475.260.01**
1	175 | *6 7/8*	6 | *1/4*	6	68	34 | *1 1/4*	40	25.4 | *1*	B	12,500	1	**475.261.01**
1	200 | *8*	6 | *1/4*	8	68	46 | *1 49/64*	40	20 | *3/4*	B	12,500	1	**476.260.01**
1	200 | *8*	6 | *1/4*	6	68	46 | *1 49/64*	40	25.4 | *1*	B	12,500	1	**476.261.01**
2	250 | *10*	6 | *1/4*	3	83	42 | *1 5/8*	56	20 | *3/4*	B	10,000	1	**477.260.01**
2	250 | *10*	6 | *1/4*	3	83	42 | *1 5/8*	56	25.4 | *1*	B	10,000	1	**477.261.01**
2	300 | *12*	6 | *1/4*	3	83	67 | *2 5/8*	56	20 | *3/4*	B	10,000	1	**478.260.01**

Knotted Bevel Brushes, for grass trimmers

	D mm | *inch*	A mm | *inch*	EB	DM	H mm | *inch*	h	Z	d mm | *inch*	ZF	RPM max.	Pack.	**STH 0.50** | *0.020"* Art.-No.
3	170 | *6 3/4*	12 | *1/2*	6	50	50 | *2*	58	32	20 | *3/4*	B	10,000	1	**475.250.01**
3	170 | *6 3/4*	12 | *1/2*	6	50	50 | *2*	58	32	25.4 | *1*	B	10,000	1	**475.251.01**
4	200 | *8*	14 | *9/16*	6	64	37 | *1 1/2*	55	36	20 | *3/4*	B	10,000	1	**476.250.01**
4	200 | *8*	14 | *9/16*	6	64	37 | *1 1/2*	55	36	25.4 | *1*	B	10,000	1	**476.251.01**

The brushes are suitable for all common grass trimmer and brush cutter models. Possible special diameters or special bores are deliverable on demand.

LESSMANN®
THE GERMAN BRUSH COMPANY

BRUSHES WITH SHANK

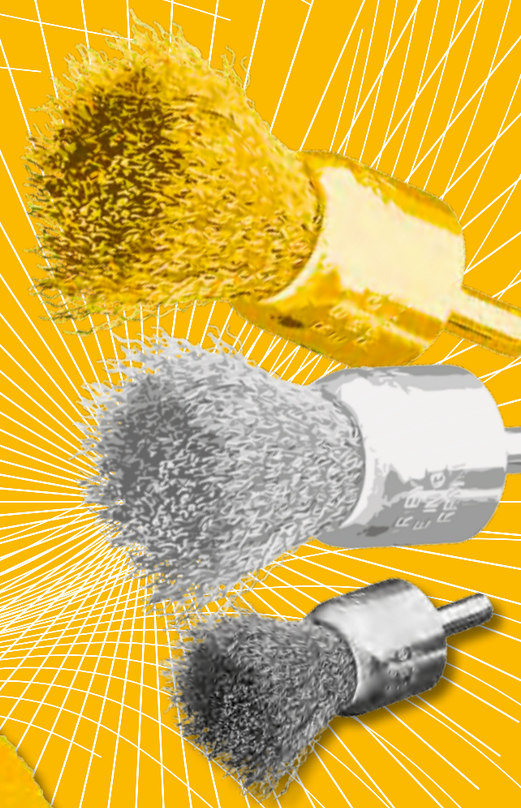

Wheel Brushes with Shank

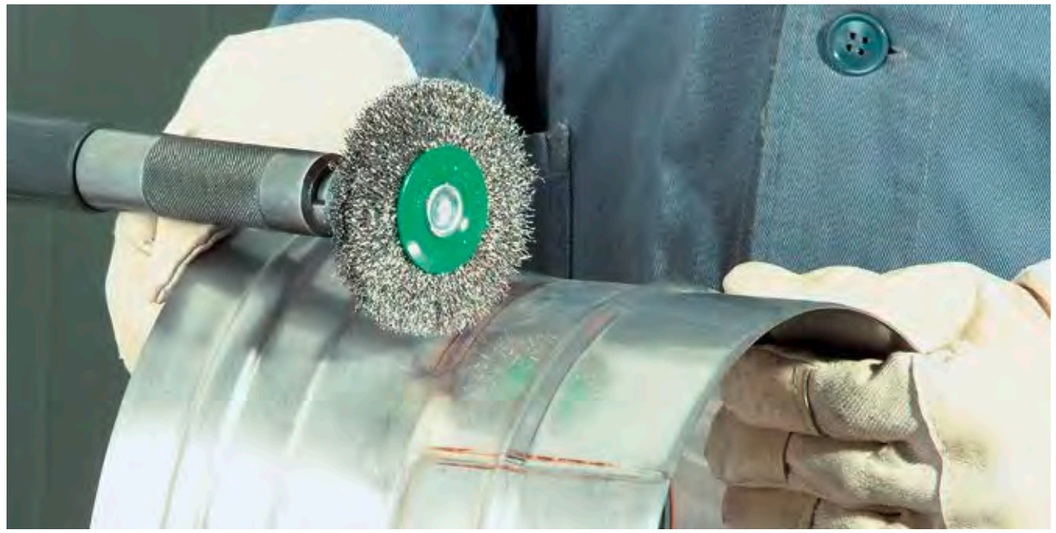

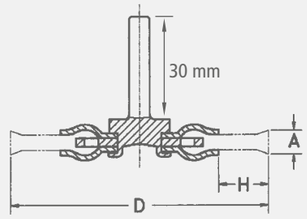

Z = number of knots, R = number of rows

Wheel Brushes with Shank
The wheel brushes shown on these pages are manufactured with a mounted shank for professional use. Tight filling wire and balanced running make these brushes excellent tools.

Knotted Wheel Brushes with Shank
It does not matter if the brush has one or two rows, the brush is the prefect tool for removing underseal, rust deburring, roughening etc. For working in narrow places we recommend our brush 417.198.11, which is an especially narrow Brush.

Encapsulated Brushes
By embedding in tough plastic the filling width always remains the same and early break of the wires can be prevented. It's the perfect tool for long lasting and safe working. The colour on the picture can differ from the colour on the brush.

Wheel brushes with shank completely stainless steel
All the inner and outer parts of these brushes such as shanks, side plates, rings, etc. are made of stainless steel. Therefore these brushes are the perfect tool for working in damp and difficult places. These brushes do not have green side plates.

Structuring Brushes with Shank
These brushes are special brushes which can be used for wood grain surfaces.

Shank Brushes with Silicon Carbide Bristles
The high quality bristles with silicon carbide can be used for deburring, polishing and structuring of stainless steel, aluminium and plastic surfaces. Besides the articles mentioned on this page we can also supply other grits, diameters and widths.

Item Nos. in bold are available ex stock.
Consider our minimum order value for *italic printed* article numbers (see page 139).

STA = steel wire
STH = steel wire, high tensile
ROH = stainless steel wire, high tensile

Stainless Steel Brushes
LESSMANN brushes with stainless steel wire have green site plates. We use wire with material number 1.4310. Material number 1.4401. can be used on request.
More information for brush applications on stainless materials you will find at www.lessmann.com

The brushes have a 6 mm shank. On demand the brushes can also be supplied with 1/4" shanks (USA execution).

Brushes with other diameters, filling widths and filling material are available on request.

1 2 3

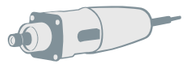

Knot Wheel Brushes with Shank Ø 6 mm

	D mm | *inch*	A mm | *inch*	H mm | *inch*	Z	R	RPM max.	Pack.	**STH 0.35** | *0.014"* Art.-No.	**STH 0.50** | *0.020"* Art.-No.	**ROH 0.50** | *0.020"* Art.-No.
1	75 | *3*	9 | *3/8*	15 | *5/8*	18	1	25,000	10		**417.198.11**	
1	75 | *3*	12 | *1/2*	15 | *5/8*	18	1	25,000	10	**417.168**	**417.198**	**417.398**
2	75 | *3*	16 | *5/8*	15 | *5/8*	18	2	25,000	10		**417.199**	**417.399**

Wheel Brushes with Shank Ø 6 mm, Encapsulated

	D mm | *inch*	A mm | *inch*	H mm | *inch*	RPM max.	Pack.	**STA 0.30** | *0.012"* Art.-No.
3	50 | *2*	8 | *5/16*	13 | *1/2*	15,000	10	**415.160**
3	60 | *2 3/8*	8 | *5/16*	18 | *3/4*	15,000	10	**416.160**
3	76 | *3*	8 | *5/16*	23 | *7/8*	15,000	10	**417.160**

Wheel Brushes with Shank

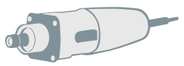

Wheel Brushes with Shank Ø 6 mm

D mm | *inch*	A	H	RPM max.	Pack.	1 | 2 STA 0.15 | *0.006"* Art.-No.	STA 0.20 | *0.008"* Art.-No.	STA 0.30 | *0.012"* Art.-No.	STA 0.50 | *0.020"* Art.-No.	3 STM 0.25 | *0.010"* Art.-No.
20 | *3/4*	6	3	20,000	10	*411.132*	**411.142**			
30 | *1 1/4*	6	6	20,000	10	**413.132**	**413.142**	**413.162**		
30 | *1 1/4*	9	6	20,000	10	*413.133*	**413.143**	**413.163**		
40 | *1 3/8*	8	9	18,000	10	**414.132**	**414.142**	**414.162**	**414.192**	*414.752*
40 | *1 3/8*	11	9	18,000	10	*414.133*	**414.143**	**414.163**	*414.193*	available on demand
50 | *2*	10	12	15,000	10	*415.132*	**415.142**	**415.162**	**415.192**	**415.752**
50 | *2*	14	12	15,000	10	**415.133**	**415.143**	**415.163**	*415.193*	available on demand
60 | *2 3/8*	10	17	15,000	10	*416.132*	**416.142**	**416.162**	available on demand	*416.752*
60 | *2 3/8*	14	17	15,000	10	**416.133**	**416.143**	**416.163**	*416.193*	available on demand
70 | *2 3/4*	12	19	15,000	10	*417.132*	**417.142**	**417.162**	**417.192**	**417.752**
70 | *2 3/4*	16	19	15,000	10	**417.133**	**417.143**	**417.163**	available on demand	available on demand
80 | *3 1/4*	12	20	15,000	10	available on demand	**418.142**	**418.162**	*418.192*	*418.752*
80 | *3 1/4*	18	20	15,000	10	available on demand	**418.143**	**418.163**	available on demand	available on demand
70 | *2 3/4*	10	14	15,000	10				**417.196***	

Structuring Brushes with Shank Ø 8 mm

D mm | *inch*	A	H	RPM max.	Pack.	4 STM 0.25 | *0.010"* Art.-No.	SIC 80/1.4 Art.-No.
80 | *3 1/4*	35	28	4,000	1	**418.704**	*418.803*

* cambered plates

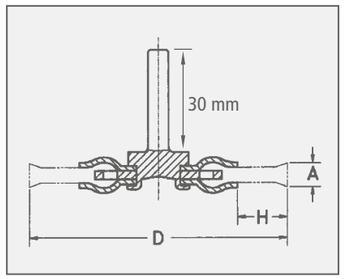

Item Nos. in bold are available ex stock.
Consider our minimum order value for *italic printed* article numbers (see page 139).

STA	= steel wire
STM	= brass coated steel
ROF	= stainless steel wire
MES	= brass wire
SIC	= silicon carbide bristles

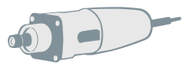

Wheel Brushes with Shank Ø 6 mm, Stainless Steel and Brass Wire

D mm | *inch*	A mm | *inch*	H mm | *inch*	RPM max.	Pack.	1 ROF 0.20 | *0.008"* Art.-No.	ROF 0.30 | *0.012"* Art.-No.	2 MES 0.20 | *0.008"* Art.-No.
20 | *3/4*	6 | *1/4*	3 | *1/8*	20,000	10	**411.342**		**411.542**
30 | *1 1/4*	6 | *1/4*	6 | *1/4*	20,000	10	**413.342**	*413.362*	**413.542**
30 | *1 1/4*	9 | *3/8*	6 | *1/4*	20,000	10	**413.343**	*413.363*	*413.543*
40 | *1 3/8*	8 | *5/16*	9 | *3/8*	18,000	10	**414.342**	**414.362**	**414.542**
40 | *1 3/8*	11 | *4/9*	9 | *3/8*	18,000	10	**414.343**	available on demand	*414.543*
50 | *2*	10 | *3/8*	12 | *1/2*	15,000	10	**415.342**	**415.362**	**415.542**
50 | *2*	14 | *9/16*	12 | *1/2*	15,000	10	**415.343**	**415.363**	**415.543**
60 | *2 3/8*	10 | *3/8*	17 | *5/8*	15,000	10	**416.342**	**416.362**	**416.542**
60 | *2 3/8*	14 | *9/16*	17 | *5/8*	15,000	10	**416.343**	**416.363**	**416.543**
70 | *2 3/4*	12 | *1/2*	19 | *3/4*	15,000	10	**417.342**	**417.362**	**417.542**
70 | *2 3/4*	16 | *5/8*	19 | *3/4*	15,000	10	**417.343**	**417.363**	**417.543**
80 | *3 1/4*	12 | *1/2*	20 | *3/4*	15,000	10	**418.342**	**418.362**	**418.542**
80 | *3 1/4*	18 | *3/4*	20 | *3/4*	15,000	10	**418.343**	**418.363**	**418.543**

3 Wheel Brushes with Shank Ø 6 mm, Completely Stainless

D mm | *inch*	A mm | *inch*	H mm | *inch*	RPM max.	Pack.	ROF 0.20 | *0.008"* Art.-No.	ROF 0.30 | *0.012"* Art.-No.
50 | *2*	15 | *5/8*	12 | *1/2*	15,000	10	**415.301**	**415.302**
60 | *2 3/8*	17 | *5/8*	17 | *5/8*	15,000	10	**416.303**	*416.302*
70 | *2 3/4*	18 | *3/4*	19 | *3/4*	15.000	10	**417.306**	**417.309**

4 Wheel Brushes with Shank Ø 6 mm, Silicon Carbide Bristles

D mm | *inch*	A mm | *inch*	H mm | *inch*	RPM max.	Pack.	SIC 120/1.1 Art.-No.	SIC 180/0.9 Art.-No.	SIC 320/0.6 Art.-No.
50 | *2*	10 | *3/8*	12 | *1/2*	15,000	10	**415.842**	*415.852*	**415.872**
70 | *2 3/4*	12 | *1/2*	20 | *3/4*	15,000	10	**417.842**	**417.852**	**417.872**
80 | *3 1/4*	14 | *9/16*	22 | *7/8*	15,000	10	**418.842**	available on demand	**418.872**

Cup Shank Brushes

Cup Brushes with Shank
Ideal for working on medium and large areas.

Cup Shank Brushes with Plastic Cup
Cup Shank Brushes with Plastic Cup and stainless steel wire especially are used for applications on stainless steel materials.
The plastic cup prevents contact with the working piece, therefore it protects from corrosion or other foreign particles.

Brushes with steel and stainless steel wire can be used at higher RPM and can therefore be used on electrical and air driven grinding machines. These models are known for their high density of filling material and therefore they have a very long lifetime.

The brushes with silicon carbide bristles can be used for deburring, polishing or structuring of stainless steel, aluminium and plastic surfaces.

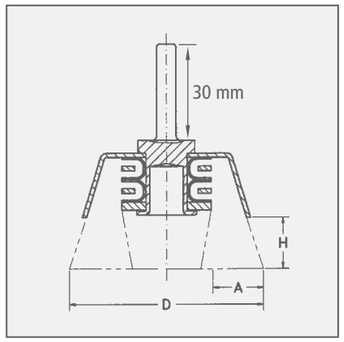

Item Nos. in bold are available ex stock.
Consider our minimum order value for *italic printed* article numbers (see page 139).

STA = steel wire
STH = steel wire, high tensile
ROF = stainless steel wire
MES = brass wire
SIC = silicon carbide bristles

1 Cup Brushes with Shank Ø 6 mm

D mm | *inch*	A mm | *inch*	H mm | *inch*	RPM max.	Pack.	**STA 0.20** | *0.008"* Art.-No.	**STA 0.30** | *0.012"* Art.-No.	**ROF 0.20** | *0.008"* Art.-No.	**ROF 0.30** | *0.012"* Art.-No.	**MES 0.20** | *0.008"* Art.-No.
40 | *1 3/8*	15 | *5/8*	20 | *3/4*	10,500	10	**434.142**	**434.162**	*434.342*	**434.362**	**434.542**
50 | *2*	22 | *7/8*	20 | *3/4*	10,500	10	**435.142**	**435.162**	*435.342*	**435.362**	**435.542**
60 | *2 3/8*	25 | *1*	25 | *1*	8,000	10	available on demand	**436.162**	available on demand	**436.362**	available on demand
70 | *2 3/4*	30 | *1 1/4*	25 | *1*	6,000	10	**437.142**	**437.162**	*437.342*	**437.362**	**437.542**

2 Cup Brushes with Shank Ø 6 mm and Plastic Cup

D mm | *inch*	A mm | *inch*	H mm | *inch*	RPM max.	Pack.	**ROF 0.20** | *0.008"* Art.-No.	**ROF 0.25** | *0.010"* Art.-No.	**ROF 0.30** | *0.012"* Art.-No.
40 | *1 3/8*	20 | *3/4*	30 | *1 1/4*	15,000	10	**434.345**	**434.355**	**434.365**
50 | *2*	25 | *1*	28 | *1*	10,500	10	**435.345**	**435.355**	**435.365**

3 Cup Brushes with Shank Ø 6 mm, Silicon Carbide Bristles

D mm | *inch*	A mm | *inch*	H mm | *inch*	RPM max.	Pack.	**SIC 80/1.2** Art.-No.	**SIC 320/0.6** Art.-No.
50 | *2*	10 | *3/8*	20 | *3/4*	4,500	10	**430.128**	**430.129**
75 | *3*	15 | *5/8*	22 | *7/8*	4,500	10	**430.138**	**430.139**

4 Knot End Brushes with Shank Ø 6 mm, Steel Wire

D mm | *inch*	H mm | *inch*	Z mm | *inch*	RPM max.	Pack.	**STH 0.50** | *0.020"* Art.-No.
75 | *3*	20 | *3/4*	18 | *3/4*	4,500	10	**483.230**

End Brushes

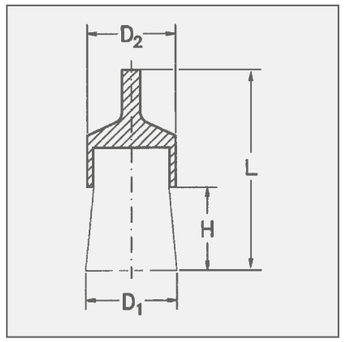

Item Nos. in bold are available ex stock.
Consider our minimum order value for *italic printed* article numbers (see page 139).

STA = steel wire
STH = steel wire, high tensile
ROF = stainless steel wire

End Brushes with Shank
For cleaning and deburring in hard to reach areas, removal of paint, rubber excess, cleaning of moulds and castings. Also for working on edges and curves, and in the inside of the bores, etc. End brushes are also available in other shapes, spreaded or pointed.

These brushes are perfect for fast moving tools. On demand also with 1/4" shank available.

Special End Brushes, crimping
The special end brushes with narrow crimped wire are characterized by its dense filling. These brushes show a harder brushing effect than brushes with normal crimped wire (e.g. page 70). These brushes are also available with extra long shanks or different diameters.

Square End Brushes
This special tool enables e. g. cleaning of blind holes and processing of bottom and side surfaces in one step.
It's perfect for cleaning and easy deburring applications, e. g. square bores. Other diameters available on demand.

Encapsulated Brushes
By embedding in tough plastic the filling width always remains the same and early break of the wires can be prevented. It's the perfect tool for long lasting and safe working. The advantages when working with encapsulated brushes are longer lifetime and harder brush effect. However, it might be possible that the brush will leave marks on the work piece.

Stainlessless Steel Brushes
Further information for brushing on stainless steel you will find on www.lessmann.com

Special Design
For your order please state your requirements regarding the measures and wires.

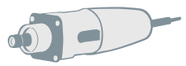

Special End Brushes with Shank Ø 6 mm, narrow crimping

	D1 mm | *inch*	D2 mm | *inch*	H mm | *inch*	L mm | *inch*	RPM max.	Pack.	**STH 0.35** | *0.014"* Art.-No.	**STH 0.50** | *0.020"* Art.-No.
1	11 | *4/9*	12 | *1/2*	25 | *1*	71 | *2 3/4*	12,000	10	*466.171*	available on demand
2	11 | *4/9*	12 | *1/2*	25 | *1*	71 | *2 3/4*	12,000	10	*466.172**	available on demand*
1	19 | *3/4*	22 | *7/8*	29 | *1 1/8*	72 | *2 3/4*	12,000	10	*460.121*	available on demand
2	19 | *3/4*	22 | *7/8*	29 | *1 1/8*	72 | *2 3/4*	12,000	10	*460.122**	available on demand*

3 Square End Brushes with Shank Ø 6 mm

D1 mm | *inch*	A mm | *inch*	L mm | *inch*	RPM max.	Pack.	**STA 0.15** | *0.006"* Art.-No.	**STA 0.25** | *0.010"* Art.-No.	**ROF 0.30** | *0.012"* Art.-No.
25.4 | *1*	8 | *5/16*	100 | *4*	4,500	10	*469.131*	*469.151*	*469.362*
31.8 | *1 1/4*	8 | *5/16*	100 | *4*	4,500	10	*469.133*	*469.153*	available on demand
38.1 | *1 1/2*	8 | *5/16*	100 | *4*	4,500	10	available on demand	available on demand	available on demand
50.8 | *1*	8 | *5/16*	100 | *4*	4,500	10	available on demand	available on demand	available on demand

4 End Brushes with Shank Ø 6 mm, Encapsulated

D1 mm | *inch*	D2 mm | *inch*	H mm | *inch*	L mm | *inch*	RPM max.	Pack.	**STA 0.30** | *0.012"* Art.-No.
10 | *3/8*	10 | *3/8*	20 | *3/4*	65 | *2 1/2*	15,000	10	**451.160**
16 | *5/8*	16 | *5/8*	25 | *1*	72 | *2 7/8*	15,000	10	**452.160**
22 | *7/8*	22 | *7/8*	25 | *1*	72 | *2 7/8*	15,000	10	**453.160**
28 | *1*	28 | *1*	30 | *1 1/4*	75 | *3*	10,000	10	**456.160**

* pointed

End Brushes

End Brushes with Shank Ø 6 mm, Steel Wire

	D1 mm | *inch*	D2 mm | *inch*	H mm | *inch*	L mm | *inch*	RPM max.	Pack.	**STA 0.15** | *0.006"* Art.-No.	**STA 0.20** | *0.008"* Art.-No.	**STA 0.30** | *0.012"* Art.-No.	**STA 0.50** | *0.020"* Art.-No.
1	12 | *1/2*	10 | *3/8*	20 | *3/4*	60 | *2 3/8*	20,000	10	**451.131**	**451.141**	**451.161**	**451.191**
2	12 | *1/2*	10 | *3/8*	20 | *3/4*	60 | *2 3/8*	20,000	10			**451.162***	*451.192**
3	12 | *1/2*	10 | *3/8*	20 | *3/4*	120 | *4 3/4*	15,000	10	**458.131**	**458.141**	**458.161**	**458.191**
4	17 | *5/8*	16 | *5/8*	22 | *7/8*	65 | *2 1/2*	20,000	10	*452.131*	**452.141**	**452.161**	**452.191**
5	23 | *7/8*	22 | *7/8*	25 | *1*	68 | *2 3/4*	18,000	10	**453.131**	**453.141**	**453.161**	**453.191**
	30 | *1 1/4*	29 | *1 1/8*	25 | *1*	68 | *2 3/4*	18,000	10	**456.131**	**456.141**	**456.161**	**456.191**
	50 | *2*	22 | *7/8*	18 | *3/4*	68 | *2 3/4*	18,000	10			**453.163****	
6	70 | *2 3/4*	29 | *1 1/8*	25 | *1*	68 | *2 3/4*	18,000	10			**456.163****	

End Brushes with Shank Ø 6 mm, Brassed Steel Wire, Cord Wire

D1 mm | *inch*	D2 mm | *inch*	H mm | *inch*	L mm | *inch*	RPM max.	Pack.	7 **STM 0.25** | *0.010"* Art.-Nr.	8 **STL 0.175** | *0.007"* Art.-Nr.	8 **STL 0.22** | *0.009"* Art.-Nr.
17 | *5/8*	16 | *5/8*	22 | *7/8*	65 | *2 1/2*	20,000	10	**452.751**	*452.703*	*452.705*
23 | *7/8*	22 | *7/8*	25 | *1*	68 | *2 3/4*	18,000	10	**453.751**	*453.703*	*453.705*
30 | *1 1/4*	29 | *1 1/8*	25 | *1*	68 | *2 3/4*	18,000	10	*456.751*	*456.703*	*456.705*

* pointed | ** spreaded

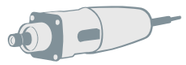

End Brushes with Shank Ø 6 mm, Stainless Steel and Brass Wire

D1 mm | *inch*	D2 mm | *inch*	H	L	RPM max.	Pack.	1 **ROF 0.20** | *0.008"* Art.-No.	1 **ROF 0.30** | *0.012"* Art.-No.	2 **MES 0.20** | *0.008"* Art.-No.	2 **MES 0.30** | *0.012"* Art.-No.
12 | *1/2*	10 | *3/8*	20	60	20,000	10	**451.341**	**451.361**	**451.541**	**451.561**
12 | *1/2*	10 | *3/8*	20	60	20,000	10		**451.362***	available on demand	available on demand
12 | *1/2*	10 | *3/8*	20	120	15,000	10	*458.341*	**458.361**	**458.541**	**458.561**
17 | *5/8*	16 | *5/8*	22	65	20,000	10	**452.341**	**452.361**	**452.541**	**452.561**
23 | *7/8*	22 | *7/8*	25	68	18,000	10	**453.341**	**453.361**	**453.541**	**453.561**
30 | *1 1/4*	29 | *1 1/8*	25	68	18,000	10	**456.341**	**456.361**	**456.541**	**456.561**
50 | *2*	22 | *7/8*	18	68	18,000	10		**453.363****		

4 End Brushes with Shank Ø 6 mm, Silicon Carbide Bristles

D1 mm | *inch*	D2 mm | *inch*	H mm | *inch*	L mm | *inch*	RPM max.	Pack.	**SIC 120/1.1** Art.-No.	**SIC 180/1.0** Art.-No.	**SIC 320/0.6** Art.-No.
12 | *1/2*	10 | *3/8*	20 | *3/4*	60 | *2 3/8*	20,000	10	*451.831*	*451.851*	*451.871*
17 | *5/8*	16 | *5/8*	22 | *7/8*	68 | *2 3/4*	20,000	10	*752.831*	*452.851*	available on demand
23 | *7/8*	22 | *7/8*	25 | *1*	70 | *2 3/4*	10,000	10	*454.831*	**454.851**	**454.871**
30 | *1 1/4*	28 | *1*	30 | *1 1/4*	75 | *3*	10,000	10	*456.831*	**456.851**	**456.871**

* pointed | ** spreaded

Brushes also available with plastic cover.

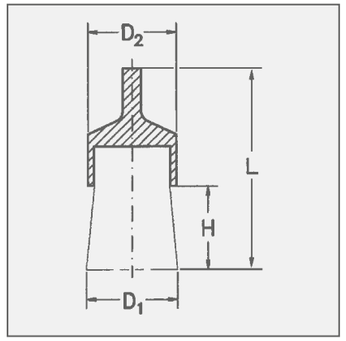

Item Nos. in bold are available ex stock.
Consider our minimum order value for *italic printed* article numbers (see page 139).

STA = steel wire
STM = brass coated steel
STL = cord wire, crimped
ROF = stainless steel wire
MES = brass wire
SIC = silicon carbide bristles

Knot End Brushes

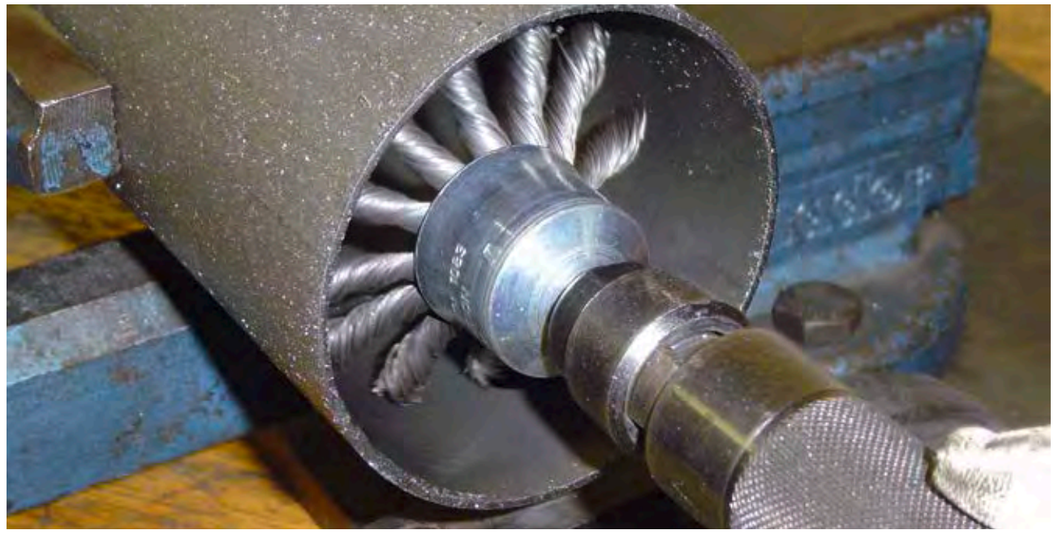

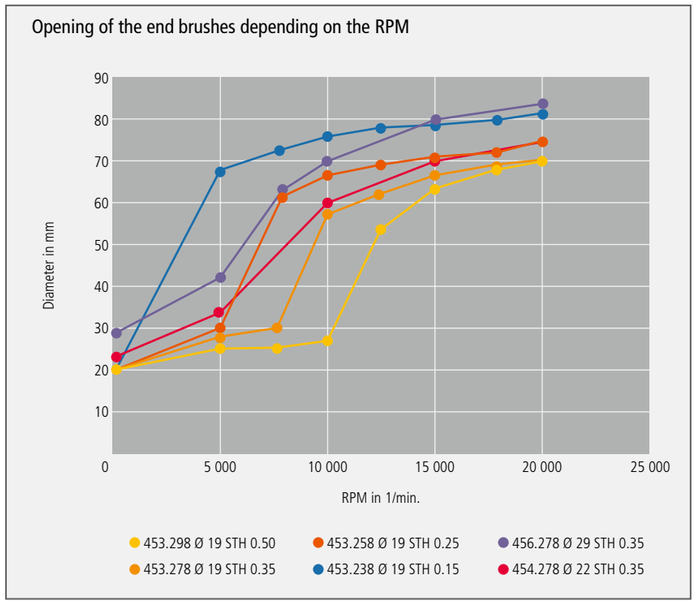

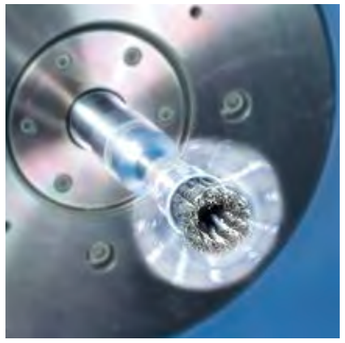

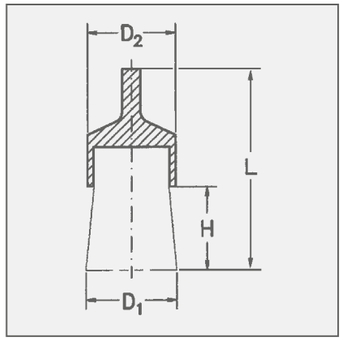

Knotted End Brushes with Shank
According to the RPM the brush will vary in dimension and enable the user to work in hard to reach areas such as drilled holes and recesses of all kinds.
The cups of the knot end brushes with stainless steel wire are **coated with plastic** to protect the stainless surface. Knotted end brushes with stainless steel wire are green characterized.

Further information on working on stainless steel you find at www.lessmann.com

Special End Brushes with Shank 6 Ø, one Knot
One-knotted End Brushes to render precise working possible.

End Brushes, filled with epoxy resin
End Brushes filled with epoxy resin are able to treat small, defined areas. The brushes are more aggressive and allow a precise handling, hence they are used e.g. for electrical cabinets or for treating mounting surfaces.

Item Nos. in bold are available ex stock.
Consider our minimum order value for *italic printed* article numbers (see page 139).

STH = steel wire, high tensile
RO4 = stainless steel wire, 1.4401

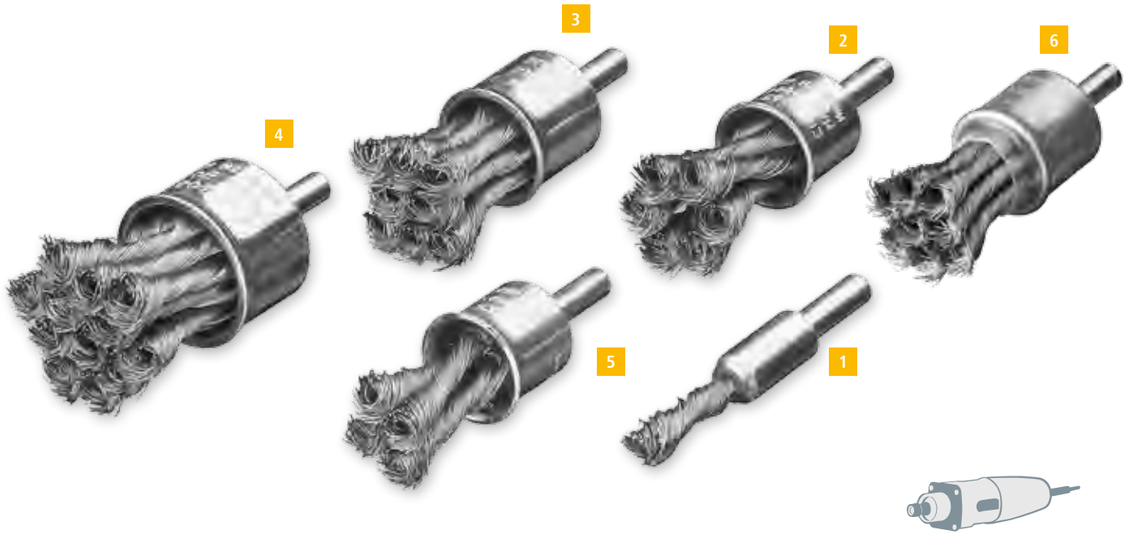

Knot End Brushes with Shank Ø 6 mm, Steel Wire

	D1/D2 mm | *inch*	L mm | *inch*	H mm | *inch*	Z	RPM max.	Pack.	**STH 0.15** | *0.006"* Art.-No.	**STH 0.25** | *0.010"* Art.-No.	**STH 0.35** | *0.014"* Art.-No.	**STH 0.50** | *0.020"* Art.-No.
1	6/10 | *1/4/3/8*	65 | *2 1/2*	25 | *1*	1	4,500	10	available on demand	**451.258**	**451.278**	available on demand
2	19 | *3/4*	72 | *2 7/8*	28 | *1*	6	20,000	10	*453.238*	**453.258**	**453.278**	**453.298**
3	22 | *7/8*	72 | *2 7/8*	28 | *1*	8	20,000	10	*454.238*	**454.258**	**454.278**	**454.298**
4	29 | *1 1/8*	72 | *2 7/8*	28 | *1*	12	20,000	10	available on demand	**456.258**	**456.278**	**456.298**
5	19 | *3/4*	72 | *2 7/8*	28 | *1*	4	20,000	50	available on demand	available on demand	**452.278GH***	available on demand

6 Knot End Brushes with Shank Ø 6 mm, Stainless Steel Wire

D1/D2 mm | *inch*	L mm | *inch*	H mm | *inch*	Z	RPM max.	Pack.	**RO4 0.15** | *0.006"* Art.-No.	**RO4 0.25** | *0.010"* Art.-No.	**RO4 0.35** | *0.014"* Art.-No.	**RO4 0.50** | *0.020"* Art.-No.
6/10 | *1/4/3/8*	65 | *2 1/2*	25 | *1*	1	4,500	10	available on demand	**451.458**	**451.478**	available on demand
19 | *3/4*	72 | *2 7/8*	28 | *1*	6	20,000	10	**453.338**	**453.358**	**453.378**	available on demand
22 | *7/8*	72 | *2 7/8*	28 | *1*	8	20,000	10	*454.338*	**454.358**	**454.378**	**454.398**
29 | *1 1/8*	72 | *2 7/8*	28 | *1*	12	20,000	10	*456.338*	**456.358**	**456.378**	**456.398**

* filled with epoxy resin

Miniature Brushes

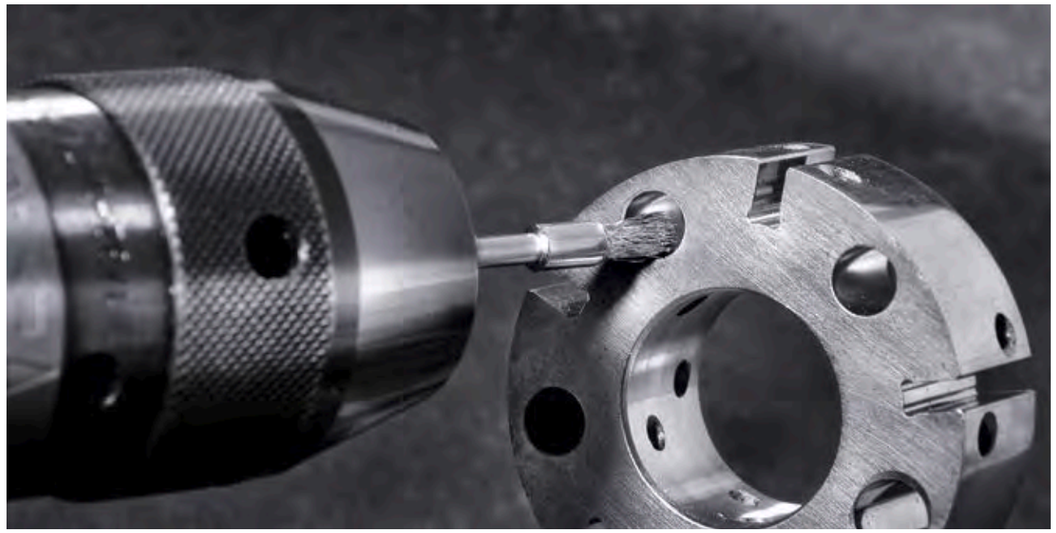

Miniature Brushes
Miniature Brushes are used for polishing, cleaning, or deburring of small-area surfaces or small working pieces. Miniature brushes remove waste and scale from weld seams or soldering points. The brushes are used on metal surfaces, steel, aluminum, cast iron, plastics, stone or wood.

Typical fields of applications:
- Precision tools
- Fine mechanics
- Pneumatic and hydraulics
- Electronics parts, e.g. plates

Miniature Brushes are available in different types as wheel, cup and end brushes.
The typical filling materials are steel wire, stainless steel wire, brass wire or abrasive bristles.

Stainless Steel Brushes
Information on working on stainless steel you find at www.lessmann.com

Item Nos. in bold are available ex stock.
Consider our minimum order value for *italic printed* article numbers (see page 139).

STH	= steel wire, high tensile
ROF	= stainless steel wire
MES	= brass wire
SIC	= silicon carbide bristles
AO	= aluminium oxide bristles

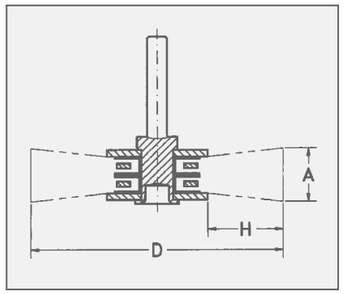

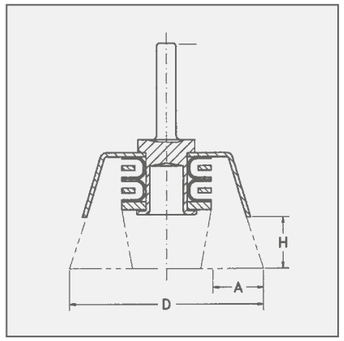

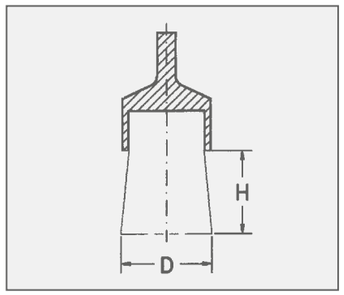

1 Miniature Wheel Brushes with shank Ø 3 mm

D mm | *inch*	A	H	RPM max.	Pack.	Diamond K400 Art.-No.	SIC 500/0.46 Art.-No.	AO 500/0.46 Art.-No.	STH 0.10 | *0.004"* Art.-No.	ROF 0.10 | *0.004"* Art.-No.	MES 0.10 | *0.004"* Art.-No.
16 | *5/8*	2	3	15,000	10	*410.811.DB*	*410.881*	*410.801*	**410.221**	**410.321**	*410.521*
19 | *3/4*	2	5	12,000	10	*410.812.DB*	*410.882*	*410.802*	**410.222**	**410.322**	**410.522**
22 | *7/8*	2	6	10,000	10	*410.813.DB*	**410.883**	*410.803*	**410.223**	**410.323**	**410.523**

2 Miniature Cup Brushes with shank Ø 3 mm

D mm | *inch*	A	H	RPM max.	Pack.	Diamond K400 Art.-No.	SIC 500/0.46 Art.-No.	AO 500/0.46 Art.-No.	STH 0.10 | *0.004"* Art.-No.	ROF 0.10 | *0.004"* Art.-No.	MES 0.10 | *0.004"* Art.-No.
15 | *5/8*	2	5	15,000	10	*430.812.DB*	*430.882*	*430.802*	**430.222**	**430.322**	**430.522**
18 | *3/4*	2	6	15,000	10	*430.813.DB*	**430.883**	*430.803*	**430.223**	**430.323**	**430.523**

3 Miniature End Brushes with shank Ø 3 mm

D mm | *inch*	H	RPM max.	Pack.	Diamond K400 Art.-No.	SIC 500/0.46 Art.-No.	AO 500/0.46 Art.-No.	STH 0.10 | *0.004"* Art.-No.	ROF 0.10 | *0.004"* Art.-No.	MES 0.10 | *0.004"* Art.-No.
5 | *13/64*	8	5,000	10	*450.821.DB*	**450.881**	*450.801*	**450.221**	**450.311**	**450.521**

All Brushes also available with shank Ø 2,34 and 3,17 mm.

ROKI
LESSMANN

Hand Brushes

Hand Brushes
Hand Brushes are used everywhere, in the metal industry, construction work, in the workshop. They are found in every tool box. The complete range contains all types of filling materials, from coarse steel to the finest brass wire. The handles are made of beech wood with two hanging holes.

LESSMANN Handbrushes are of superb quality and yet are economic due to a fully automated and efficient production facility. Using modern marking systems individual printing of brands and EAN Bar Codes can be made. This is done by burning stamps or tampon printing at low cost.

Brake Caliper Brushes ROKI
This brush has been manufactured in co-operation with the automobile industry. This brush is used for cleaning off clogged lining deposits when changing brake pad linings. Thus the brush is very slim with a heavy straight wire filling. Made in this way it prevents damage to sensitive brake areas during use. The brush 182.431 has to the top a sloping filling and is therefore extra hard. New is the two-components-handle with the latest ergonomical aspects. Because of the design and the ergonomic handle this brush is remarkably versatile to use.

Hand Brushes with Two-Components Handles
apply to other requirements of modern high quality tools with best ergonomics.

Rivet Brushes
The V shaped filling material enables the removal of slag and scale from normally hard to reach welds and fillet welds

Hand Brushes with Scraper
For painters and bricklayers in the construction industry. These brushes are ideal for scraping off dirt or cement splashes.

Hand Brushes, Heavy Duty
These models have a larger wooden handle and a longer and dense wire filling than our standard models.

Universal Wire Brushes
For many uses, especially in the Do It Yourself section.

Stainless Steel Brushes
Information on brushing on stainless materials you will find at www.lessmann.com

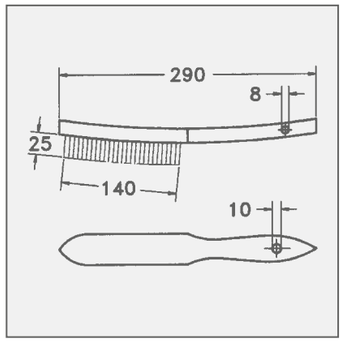

All standard hand brushes have a bar code stamp and LESSMANN-imprint.

PEFC
PEFC/04-31-0389

We are accredited!

Hand Brushes Standard

EAN

Hand Brushes

	Rows >	1	2	3	4	5	6
Filling	Pack.	Art.-No.	Art.-No.	Art.-No.	Art.-No.	Art.-No.	Art.-No.
STA straight 0.35 | *0.014"*	12	**100.011**	**100.021**	**100.031**	**100.041**	**100.051**	**100.061**
STA straight 0.35 | *0.014"*	100		**100.020**	**100.030**	**100.040**	**100.050**	
1 **STM** crimped 0.30 | *0.012"*	12		**105.421**	**105.431**	**105.441**	**105.451**	**105.461**
STA crimped 0.20 | *0.008"*	12			**102.431**	**102.441**		
STA crimped 0.30 | *0.012"*	12	**102.611**	**102.621**	**102.631**	**102.641**	**102.651**	**102.661**
ROF crimped 0.15 | *0.006"*	12		**104.321**	**104.331**	**104.341**	**104.351**	
ROF crimped 0.20 | *0.008"*	12		**104.421**	**104.431**	**104.441**	**104.451**	
2 **ROF** crimped 0.35 | *0.012"*	12	**104.611**	**104.621**	**104.631**	**104.641**	**104.651**	**104.661**
ROF straight 0.35 | *0.012"*	12	**103.711**	**103.721**	**103.731**	**103.741**	**103.751**	**103.761**
RO8 straight 0.30 | *0.012"*	12		**105.721**	**105.731**	**105.741**		
MES crimped 0.15 | *0.006"*	12		**107.321**	**107.331**	**107.341**	**107.351**	
3 **MES** crimped 0.25 | *0.010"*	12	*107.411*	**107.421**	**107.431**	**107.441**	**107.451**	**107.461**
MES crimped 0.35 | *0.014"*	12	*107.611*	**107.621**	**107.631**	**107.641**	**107.651**	**107.661**
MES straight 0.35 | *0.014"*	12		**106.621**	**106.631**	**106.641**	**106.651**	
BRO crimped 0.20 | *0.008"*	12			*108.331*	**108.341**	**108.351**	
PA straight 0.40 | *0.016"*	12			**109.431**	**109.441**	**109.451**	
4 **FIB**	12				**109.741**		

Other filling materials and trim length on request.

Item Nos. in bold are available ex stock.
Consider our minimum order value for *italic printed* article numbers (see page 139).

STA = steel wire	**MES** = brass wire
STM = brass coated steel	**BRO** = bronze wire
ROF = stainless steel wire	**PA** = polyamide
RO8 = stainless steel wire, extremely heat resistant	**FIB** = fibre
	ROS = horse hair

Special Hand Brushes

1 2 3 4 6 5

Special Hand Brushes

	Filling	Rows	L	B	A	H	Pack.	Art.-No.
	Brake Caliper Brushes with Two-Components Handles		mm | *inch*	mm | *inch*	mm | *inch*	mm | *inch*		
1	**STA** straight 0.35 | *0.014"*	2 x 13	225 | *9*	12 | *1/2*	90 | *3 1/2*	22 | *7/8*	10	**182.401**
	STA crimped 0.30 | *0.012"*	2 x 13	225 | *9*	12 | *1/2*	90 | *3 1/2*	22 | *7/8*	10	**182.411**
2	**STA** straight 0.35 | *0.014"*	2 x 12/13	225 | *9*	12 | *1/2*	90 | *3 1/2*	12/18 | *1/2/5/8*	10	**182.431***
3	**ROF** straight 0.35 | *0.014"*	2 x 13	225 | *9*	12 | *1/2*	90 | *3 1/2*	22 | *7/8*	10	**182.421**
4	**MES** crimped 0.25 | *0.010"*	2 x 13	225 | *9*	12 | *1/2*	90 | *3 1/2*	22 | *7/8*	10	**182.451**
	Hand Brushes with Plastic Handles							
5	**STA** straight 0.35 | *0.014"*	2	285 | *11 1/4*	20 | *3/4*	130 | *5 1/8*	25 | *1*	10	**185.121**
	STA straight 0.35 | *0.014"*	3	285 | *11 1/4*	26 | *1*	130 | *5 1/8*	25 | *1*	10	**185.131**
	STA straight 0.35 | *0.014"*	4	285 | *11 1/4*	31 | *1 1/4*	130 | *5 1/8*	25 | *1*	10	**185.141**
	STA straight 0.35 | *0.014"*	5	285 | *11 1/4*	31 | *1 1/4*	130 | *5 1/8*	25 | *1*	10	**185.151**
	ROF crimped 0.35 | *0.014"*	2	285 | *11 1/4*	20 | *3/4*	130 | *5 1/8*	25 | *1*	10	**185.421**
	ROF crimped 0.35 | *0.014"*	3	285 | *11 1/4*	26 | *1*	130 | *5 1/8*	25 | *1*	10	**185.431**
	ROF crimped 0.35 | *0.014"*	4	285 | *11 1/4*	31 | *1 1/4*	130 | *5 1/8*	25 | *1*	10	**185.441**
	ROF crimped 0.35 | *0.014"*	5	285 | *11 1/4*	31 | *1 1/4*	136 | *5 1/8*	25 | *1*	10	**185.451**
	MES straight 0.35 | *0.014"*	2	285 | *11 1/4*	20 | *3/4*	130 | *5 1/8*	25 | *1*	10	**185.621**
	MES straight 0.35 | *0.014"*	3	285 | *11 1/4*	26 | *1*	130 | *5 1/8*	25 | *1*	10	**185.631**
	MES straight 0.35 | *0.014"*	4	285 | *11 1/4*	31 | *1 1/4*	130 | *5 1/8*	25 | *1*	10	**185.641**
	MES straight 0.35 | *0.014"*	5	285 | *11 1/4*	31 | *1 1/4*	130 | *5 1/8*	25 | *1*	10	*185.651*
	Hand Brushes with Two-Components Handles							
6	**ROF** straight 0.35 | *0.014"*	3	285 | *11 1/4*	26 | *1*	130 | *5 1/8*	25 | *1*	10	**186.431**

* Special hard brushes, pointed | For the food industry

Brushes for the food industry
These brushes comply to the hygiene charter of the FEIBP (European Brushware Federation) and are accredited in the food industry.

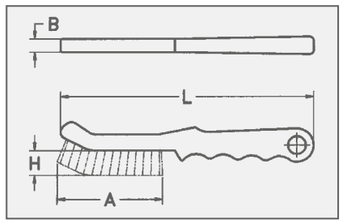

Special Hand Brushes

1 2 3 4 5 6

Special Hand Brushes

	Filling	Rows	L	B	A	H	Pack.	Art.-No.
			mm | *inch*	mm | *inch*	mm | *inch*	mm | *inch*		
EAN 1	**Rivet Brushes**							
	STA straight 0.35 | *0.014"*	3 x 15	290 | *11 3/8*	35 | *1 1/2*	135 | *5 3/8*	35 | *1 1/2*	12	**120.801**
	ROF straight 0.35 | *0.014"*	3 x 15	290 | *11 3/8*	35 | *1 1/2*	135 | *5 3/8*	35 | *1 1/2*	12	**120.811**
	RO8 straight 0.30 | *0.012"*	3 x 15	290 | *11 3/8*	35 | *1 1/2*	135 | *5 3/8*	35 | *1 1/2*	12	**120.831**
	ROF straight 0.35 | *0.014"* with Plastic Handles	3 x 15	290 | *11 3/8*	31 | *1 1/4*	135 | *5 3/8*	35 | *1 1/2*	12	**120.811**
EAN 2	**Hand Brushes with Scraper**							
	STA straight 0.35 | *0.014"*	4 x 15	290 | *11 3/8*	35 | *1 1/2*	140 | *5 1/2*	25 | *1*	12	**120.401**
	STA straight 0.35 | *0.014"*	6 x 15	290 | *11 3/8*	45 | *2*	140 | *5 1/2*	25 | *1*	12	*120.601*
3	**Hand Brushes Heavy Duty**							
	STA straight 0.35 | *0.014"*	2 x 16	290 | *11 3/8*	30 | *1 1/4*	150 | *6*	32 | *1 1/4*	12	**136.101**
	STA straight 0.35 | *0.014"*	3 x 16	290 | *11 3/8*	35 | *1 1/2*	150 | *6*	32 | *1 1/4*	12	**136.102**
	STA straight 0.35 | *0.014"*	4 x 16	290 | *11 3/8*	40 | *1 3/8*	150 | *6*	32 | *1 1/4*	12	**136.103**
	Hand Brushes Export Model							
4	**STA** straight 0.35 | *0.014"*	4 x 17	300 | *12*	30 | *1 1/4*	130 | *5 1/8*	25 | *1*	12	**122.401**
5	**STA** straight 0.35 | *0.014"*	4 x 19	350 | *14*	30 | *1 1/4*	160 | *6 3/8*	30 | *1 1/4*	6	**122.801**
6	**Universal Wire Brushes**							
	STM crimped 0.30 | *0.012"*	1	260 | *10 1/4*	10 | *3/8*	135 | *5 3/8*	28 | *1*	24	**056.001**
	STA crimped 0.35 | *0.014"*	1	260 | *10 1/4*	10 | *3/8*	135 | *5 3/8*	28 | *1*	24	**056.301**
	ROF crimped 0.30 | *0.012"*	1	260 | *10 1/4*	10 | *3/8*	135 | *5 3/8*	28 | *1*	24	**056.501**
	MES crimped 0.30 | *0.012"*	1	260 | *10 1/4*	10 | *3/8*	135 | *5 3/8*	28 | *1*	24	**056.701**

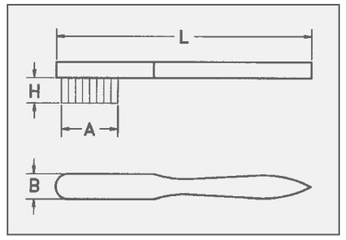

Item Nos. in bold are available ex stock.
Consider our minimum order value for *italic printed* article numbers (see page 139).

STA = steel wire
STM = brass coated steel
ROF = stainless steel wire
RO8 = stainless steel wire, extremely heat resistant
MES = brass wire

Spark Plug Brushes

1 2 3 4 5 6

Standard Spark Plug Brushes

		Filling	Rows	L mm | *inch*	B mm | *inch*	A mm | *inch*	H mm | *inch*	Pack.	Art.-No.
EAN	1	**MES** crimped 0.15 | *0.006"*	3 x 5/6	150 | *6*	15 | *5/8*	40 | *1 3/8*	15 | *5/8*	12	**125.211**
EAN		**STA** crimped 0.15 | *0.006"*	3 x 5/6	150 | *6*	15 | *5/8*	40 | *1 3/8*	15 | *5/8*	12	**125.201**
EAN		**ROF** crimped 0.15 | *0.006"*	3 x 5/6	150 | *6*	15 | *5/8*	40 | *1 3/8*	15 | *5/8*	12	**125.231**
EAN		**MES** crimped 0.15 | *0.006"* / PP	3 x 5/6	150 | *6*	15 | *5/8*	40 | *1 3/8*	15 | *5/8*	12	**125.221**
EAN		**MES** crimped 0.15 | *0.006"*	3 x 5/6	150 | *6*	15 | *5/8*	40 | *1 3/8*	15 | *5/8*	12	**125.311***
EAN		**ROF** crimped 0.20 | *0.008"*	3 x 5/6	150 | *6*	15 | *5/8*	40 | *1 3/8*	15 | *5/8*	12	**125.241**
EAN		**PA** straight 0.30 | *0.012"*	3 x 5/6	150 | *6*	15 | *5/8*	40 | *1 3/8*	15 | *5/8*	12	**125.251**
	2	**BRO** crimped 0.15 | *0.006"*	3 x 5/6	200 | *8*	15 | *5/8*	40 | *1 3/8*	15 | *5/8*	12	**132.801**
		Small Spark Plug Brushes							
	3	**MES** crimped 0.15 | *0.006"*	2 x 5	100 | *4*	15 | *5/8*	25 | *1*	15 | *5/8*	12	**125.111**
	4	**MES** crimped 0.15 | *0.006"*	2 x 4	100 | *4*	12 | *1/2*	22 | *7/8*	12 | *1/2*	12	**182.001****
		Large Spark Plug Brushes							
		MES crimped 0.15 | *0.006"*	5 x 8/10	190 | *1 1/2*	24 | *1*	55 | *2 1/4*	18 | *3/4*	12	**125.511**
	5	**MES** crimped 0.15 | *0.006"* / PP	5 x 8/10	190 | *1 1/2*	24 | *1*	55 | *2 1/4*	12 | *1/2*	12	**125.521**
	6	**MES** crimped 0.15 | *0.006"*	4 x 6	155 | *6*	22 | *7/8*	40 | *1 3/8*	18 | *3/4*	12	**182.331****

* Wooden body varnished | ** Plastic body

Spark Plug Brushes

These small brushes are for all fine brushwork requiring thin wire.
They are available in different sizes and filling marterials. The models 182.001 and 182.331 have plastic bodies, the other models have a beech wood body.
The body of 125.311 is varnished.

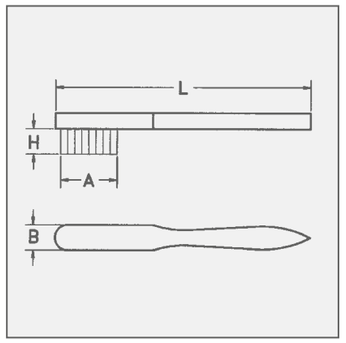

Item Nos. in bold are available ex stock.
Consider our minimum order value for *italic printed* article numbers (see page 139).

STA	= steel wire
ROF	= stainless steel wire
MES	= brass wire
BRO	= bronze wire
PA	= polyamide
ROS	= horse hair

Fine Scratch Brushes

1 2 3 4 5 6 7 8 9

Fine Scratch Brushes

	Filling	Rows	L mm | *inch*	B mm | *inch*	A mm | *inch*	H mm | *inch*	Pack.	Art.-No.
1	**MES** crimped 0.15 | *0.006"*	3	225 | *9*	16 | *5/8*	110 | *4 3/8*	20 | *3/4*	12	**126.311**
1	**MES** crimped 0.15 | *0.006"*	4	225 | *9*	20 | *3/4*	110 | *4 3/8*	20 | *3/4*	12	**126.411**
1	**MES** crimped 0.15 | *0.006"*	5	225 | *9*	24 | *1*	110 | *4 3/8*	20 | *3/4*	12	**126.511**
1	**MES** crimped 0.15 | *0.006"*	6	225 | *9*	28 | *1*	110 | *4 3/8*	20 | *3/4*	12	**126.611**
1	**MES** crimped 0.15 | *0.006"*	8	225 | *9*	36 | *1 1/2*	110 | *4 3/8*	20 | *3/4*	12	*126.811*
1	**MES** crimped 0.08 | *0.003"*	4	225 | *9*	20 | *3/4*	110 | *4 3/8*	20 | *3/4*	12	**126.441**
1	**MES** crimped 0.10 | *0.004"*	4	225 | *9*	20 | *3/4*	110 | *4 3/8*	20 | *3/4*	12	**126.431**
1	**MES** crimped 0.15 | *0.006"*	4	225 | *9*	20 | *3/4*	100 | *4*	20 | *3/4*	12	**182.162****
	ROF crimped 0.15 | *0.006"*	4	225 | *9*	20 | *3/4*	110 | *4 3/8*	20 | *3/4*	12	**126.481**
9	**ROF** crimped 0.15 | *0.006"*	4	225 | *9*	20 | *3/4*	100 | *4*	20 | *3/4*	12	**182.152****
2	**STA** crimped 0.15 | *0.006"*	4	225 | *9*	20 | *3/4*	110 | *4 3/8*	20 | *3/4*	12	**126.401**
3	**PA** straight 0.30	4	225 | *9*	20 | *3/4*	110 | *4 3/8*	20 | *3/4*	12	**126.451**
	PA straight 0.30	4	225 | *9*	20 | *3/4*	100 | *4 3/8*	20 | *3/4*	12	**182.172****
4	**ROS**	4	225 | *9*	20 | *3/4*	110 | *4 3/8*	20 | *3/4*	12	**126.472**
	Special Brushes							
6	**MES** crimped 0.35 | *0.014"*	4 x 11/12	350 | *14*	22 | *7/8*	80 | *3*	10 | *3/8*	12	**137.701**
7	**MES** crimped 0.30 | *0.012"*	5 x 9	700 | *27 1/2*	25 | *1*	54 | *2 1/4*	6 | *1/4*	12	**138.704**
	MES crimped 0.30 | *0.012"*	4 x 11/12	450 | *17 3/4*	22 | *7/8*	80 | *3*	8 | *5/16*	12	**138.705**
5	**MES** crimped 0.35 | *0.014"*	4 x 11/12	350 | *14*	22 | *7/8*	77 | *3*	10 | *3/8*	12	**182.807****
5	**MES** crimped 0.35 | *0.014"*	4 x 11/12	400 | *15 3/4*	20 | *3/4*	77 | *3*	10 | *3/8*	12	**183.704****
5	**MES** crimped 0.35 | *0.014"*	4 x 11/12	450 | *17 3/4*	22 | *7/8*	77 | *3*	10 | *3/8*	12	*182.811***
5	**MES** crimped 0.30 | *0.012"*	5 x 9/8	700 | *27 1/2*	25 | *1*	54 | *2 1/4*	6 | *1/4*	12	*183.706***
8	**MES** crimped 0.25 | *0.010"*	2 x 10	200 | *8*	15 | *5/8*	80 | *3*	19 | *3/4*	12	**132.701**

** Plastic body

Fine Scratch Brushes

Also called watchmaker and goldsmith brushes. The brushes have a very high density of filling wires and are available in different widths. These brushes are used among other things to apply solvents and other cleansing agents.

Special Brushes

The brushes were manufactured according to our customers' specification and show variations, which are possible through our flexible manufacturing procedures.

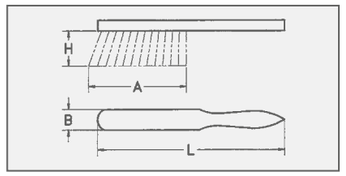

Special Models

Hand Brushes Rectangular and Violin
There are many filling wires in these stable universal brushes.

Hand Brushes with Bracket
The wooden body is pointed to the front end, the plastic bracket is nailed on. The model 140.901 has an adjustable stock board which enables an adjustment to brush firmness.

These special models are mainly ordered by our export customers.

Brushes for removing wet storage stain
Zinc coated surfaces are needed for corrosion protection. Often after the zinc coating of work parts, under wet conditions chemical reactions occur which cause wet storage stain. The special bronze wire allows the effective removal of white rust without smashing the zinc coating which has to be treated.

Radiator Brushes
This narrow, long shaped brush is ideal for hard to reach areas on heaters and radiators. The model 121.211 has a straight body, the other models have a curved body.

Staining Brushes
The treated wood is prepared with these staining brushes. By using fibre and bronze wire the brushes are insensitive against all normal
chemical based solutions. The model 144.211 has an adjustable stock board which enables an adjustment to brush firmness.
With the staining brushes 144.701 and 144.801 the surface after the staining process is polished by the leather insert strips. Any standing wood fibre is also smoothed.

File Cleaners
The brushes for cleaning wood and metal files are available in different sizes and with different file card. The file card is glued on to the wooden body.

File Card in Rolls
Various roughing-up tools can be manufactured with this material, which is also available in different sizes and filling materials. Available in meters or if required in single pieces.

Bricklayer's Brushes
For pre and retreatment of brickwork for painters and bricklayers. All models have a jute or plastic strap.

Plasterer's Brushes
These are for roughening and structuring of plaster. Body is made of beech wood, the steel pins are hardened. Model 061.111: the outer steel pins are obliquely arranged in order to reach into corners.

Spiked Rollers
For use before the removal of wallpaper. The spiked roller perforates the paper allowing absorption of stripping solvent. The roller is of plastic with the steel pins obliquely arranged to ensure maximum efficiency in use. The handle can be made longer with customised telescopic handles. For safety the roller is supplied with a protective cover.

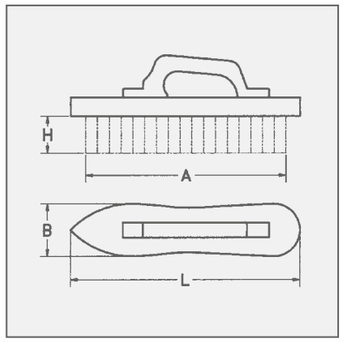

Item Nos. in bold are available ex stock.
Consider our minimum order value for *italic printed* article numbers (see page 139).

STA	= steel wire
STM	= brass coated steel
BRO	= bronze wire

PEFC
PEFC/04-31-0389

We are accredited!

Special Hand Brushes

	Filling	Rows	L	B	A	H	Pack.	Art.-No.
	Hand Brushes Rectangular and Violin		mm | *inch*	mm | *inch*	mm | *inch*	mm | *inch*		
1	**STA** straight 0.35 | *0.014"*	6 x 19	185 | *7 1/4*	57 | *2 1/4*	175 | *7*	30 | *1 1/4*	12	**140.201**
2	**STA** straight 0.35 | *0.014"*	5	200 | *8*	60 | *2 3/8*	190 | *7 1/2*	35 | *1 1/2*	16	**141.231**
3	**STM** straight 0.35 | *0.014"*	5	200 | *8*	55 | *2 1/4*	170 | *6 5/8*	40 | *1 3/8*	36	*140.641*
	Hand Brushes with Bracket							
4	**STA** straight ca. 0.35 | *0.014"*	5	225 | *9*	55 | *2 1/4*	200 | *8*	38 | *1 1/2*	16	**140.901***
5	**STM** crimped 0.35 | *0.014"*	5	225 | *9*	55 | *2 1/4*	200 | *8*	38 | *1 1/2*	16	**140.811**
	Hand Brushes with Strap							
6	**STA** straight 0.50 | *0.020"*	7	200 | *8*	70 | *2 3/4*	185 | *7 1/4*	35 | *1 1/2*	12	**141.421**
	Hand Brushes for removing wet storage stain							
7	**BRO** crimped 0.08 | *0.003"*	11 x 18	120 | *4 3/4*	70 | *2 3/4*	110 | *4 3/8*	14 | *4/7*	10	**152.811**

* with adjustable board

Special Models

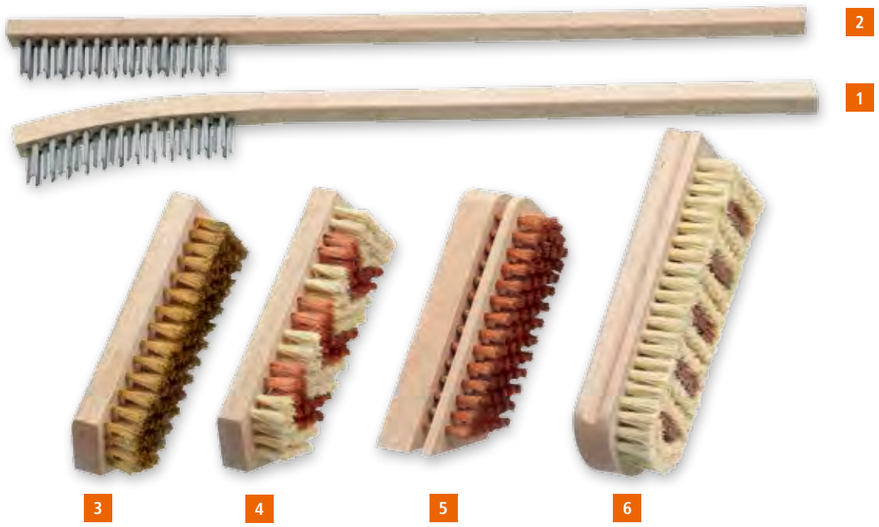

Radiator Brushes

	Filling	Rows	L mm | *inch*	B mm | *inch*	A mm | *inch*	H mm | *inch*	Pack.	Art.-No.
1	**STA** straight 0.25 | *0.010"*	3 x 13	420 | *16 1/2*	20 | *3/4*	115 | *4 1/2*	20 | *3/4*	12	**121.111***
2	**STA** straight 0.25 | *0.010"*	3 x 13	420 | *16 1/2*	20 | *3/4*	115 | *4 1/2*	20 | *3/4*	12	**121.211****

Staining Brushes

	Filling	Rows	L mm | *inch*	B mm | *inch*	A mm | *inch*	H mm | *inch*	Pack.	Art.-No.
3	**MES** crimped 0.15 | *0.006"*	7	150 | *6*	50 | *2*	140 | *5 1/2*	20 | *3/4*	12	**144.001**
	BRO crimped 0.15 | *0.006"*	7	150 | *6*	50 | *2*	140 | *5 1/2*	20 | *3/4*	12	**144.011**
4	**BRO** 0.15 | *0.006"* / **FIB**	7	150 | *6*	50 | *2*	140 | *5 1/2*	20 | *3/4*	12	**144.021**
	BRO crimped 0.15 | *0.006"*	7	180 | *7*	60 | *2 3/8*	170 | *6 5/8*	20 | *3/4*	12	**144.111**
	BRO 0.15 | *0.006"* / **FIB**	7	180 | *7*	60 | *2 3/8*	170 | *6 5/8*	20 | *3/4*	12	**144.121**
5	**BRO** crimped 0.15 | *0.006"*	6	150 | *6*	50 | *2*	130 | *5 1/8*	20 | *3/4*	12	**144.211*****
	BRO crimped 0.15 | *0.006"*	6	150 | *6*	50 | *2*	130 | *5 1/8*	15 | *5/8*	12	**144.311**
	BRO crimped 0.15 | *0.006"*	6	180 | *7*	60 | *2 3/8*	160 | *6 3/8*	15 | *5/8*	12	**144.411**
6	**Leather + FIB**	3/7	175 | *6 7/8*	60 | *2 3/8*	160 | *6 3/8*	20 | *3/4*	12	**144.701**
	Leather + FIB	4/9	203 | *8*	72 | *2 7/8*	190 | *7 1/2*	20 | *3/4*	12	**144.801**

* Wooden body curved | ** Wooden body straight | *** with adjustable board

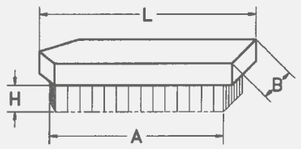

Item Nos. in bold are available ex stock.
Consider our minimum order value for *italic printed* article numbers (see page 139).

STA	= steel wire
ROF	= stainless steel wire
MES	= brass wire
BRO	= bronze wire
PP	= polypropylene
FIB	= fibre

to page 87

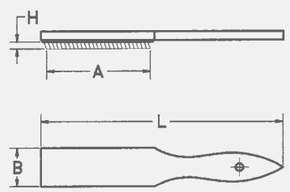

1 File Cleaners

File Cards	L mm | *inch*	B mm | *inch*	A mm | *inch*	Pack.	Art.-No.
STA	210 | *8 1/4*	25 | *1*	100 | *4*	12	**037.101**
STA	250 | *10*	40 | *1 3/8*	115 | *4 1/2*	12	**037.201**
STA	250 | *10*	40 | *1 3/8*	115 | *4 1/2*	100	**037.200**
ROF	250 | *10*	40 | *1 3/8*	115 | *4 1/2*	12	**037.221**

2 File Cards

Filling, without interval	STA width 25 Art.-No.	STA width 38 Art.-No.	STA width 51 Art.-No.	ROF width 38 Art.-No.
	000.311*	**000.321***	**000.331***	**000.323***

Bricklayer's Brushes with Strap

	Filling	Rows	L mm | *inch*	B mm | *inch*	A mm | *inch*	H mm | *inch*	Pack.	Art.-No.
3	**STA** straight 0.25 | *0.010"*	9	210 | *8 1/4*	100 | *4*	200 | *8*	35 | *1 1/2*	12	**142.101**
4	**MES** crimped 0.20 | *0.008"* / **PP**	9	210 | *8 1/4*	95 | *3 3/4*	200 | *8*	20 | *3/4*	12	**142.211****

Plasterer's Brushes

	Filling	L mm | *inch*	B mm | *inch*	A mm | *inch*	H mm | *inch*	Pack.	Art.-No.
5	86 steel Pins hardend	190 | *7 1/2*	97 | *3 3/4*	165 | *6 1/2*	16 | *5/8*	12	**061.101**
6	116 steel Pins hardend / outer row slanting	190 | *7 1/2*	97 | *3 3/4*	190 | *7 1/2*	16 | *5/8*	12	**061.111**

7 Spiked Rollers

	Filling	Rows	L mm | *inch*	B mm | *inch*	A mm | *inch*	H mm | *inch*	Pack.	Art.-No.
	steel Pins on plastic roller, with Protective Cover	12	290 | *11 3/8*	25 | *1*	148 | *5 7/8*	7 | *1/4*	10	**064.050**

* Please indicate length. | ** Wooden body varnished

Brooms and Scrubs

Brooms and Scrubs
Brooms and Scrubs for the use in all industrial companies and craftsman's establishments.

The shown brooms and scrubs are the best selling models. All models have a handle hole. The tree-trunk scrubs 148.601 is half-rounded for use in the forestry and sawmill area.

The brooms with flat steel wire 1.80 x 0.45 mm make the so called broom lines on cement floors thus receiving a rough surface.

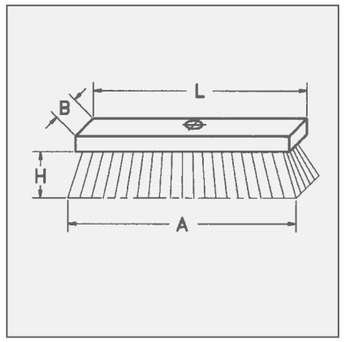

Item Nos. in bold are available ex stock.
Consider our minimum order value for *italic printed* article numbers (see page 139).

STA = steel wire
ROF = stainless steel wire
MES = brass wire

PEFC/04-31-0389

We are accredited!

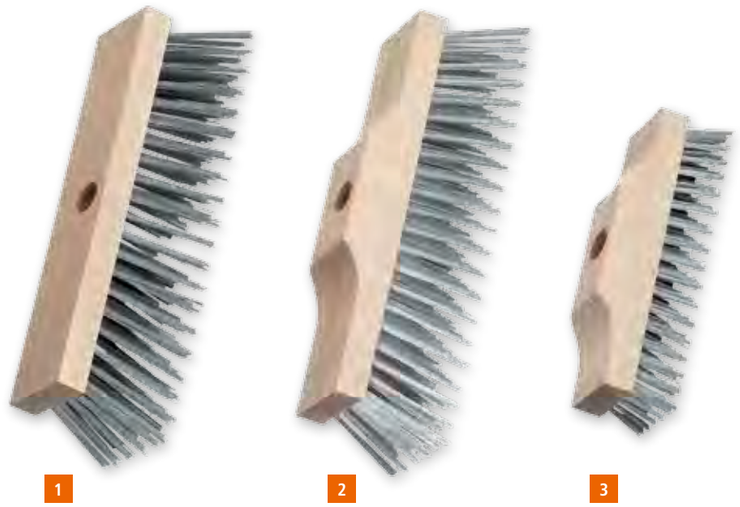

1 Brooms Flat Wooden Stock, with Handle Hole 23 Ø

Filling	Rows	L mm | *inch*	B mm | *inch*	A mm | *inch*	H mm | *inch*	Pack.	Art.-No.
STA straight 0.50 | *0.020"*	5 x 16/17	250 | *10*	60 | *2 3/8*	270 | *10 5/8*	70 | *2 3/4*	12	**147.101**
STA straight 0.50 | *0.020"*	5 x 20	300 | *12*	60 | *2 3/8*	330 | *13*	70 | *2 3/4*	12	**147.401**
STA straight 0.50 | *0.020"*	6 x 20/21	300 | *12*	70 | *2 3/4*	330 | *13*	70 | *2 3/4*	12	**147.201**
STA straight 0.50 | *0.020"*	6 x 20/21	300 | *12*	70 | *2 3/4*	330 | *13*	70 | *2 3/4*	42	**147.200**
ROF straight 0.50 | *0.020"*	6 x 20	300 | *12*	70 | *2 3/4*	330 | *13*	70 | *2 3/4*	12	**147.261**
STA straight 0.50 | *0.020"*	6 x 23	350 | *14*	70 | *2 3/4*	390 | *15 3/8*	70 | *2 3/4*	12	**147.301**

2 Brooms Raised Wooden Stock, with Handle Hole 23 Ø

Filling	Rows	L mm | *inch*	B mm | *inch*	A mm | *inch*	H mm | *inch*	Pack.	Art.-No.
STA straight 0.50 | *0.020"*	5 x 16/17	250 | *8 1/4*	60 | *2 3/8*	270 | *10 5/8*	70 | *2 3/4*	12	**146.101**
STA straight 0.50 | *0.020"*	6 x 20/21	300 | *12*	70 | *2 3/4*	330 | *13*	70 | *2 3/4*	12	**146.201**
STA flach 1.80 x 0.45	6 x 20/21	300 | *12*	70 | *2 3/4*	330 | *13*	70 | *2 3/4*	12	**146.241**
STA straight 0.50 | *0.020"*	6 x 23/24	350 | *14*	70 | *2 3/4*	390 | *15 3/8*	70 | *2 3/4*	12	**146.301**
STA flat 1.80 x 0.45	6 x 23/24	350 | *14*	70 | *2 3/4*	390 | *15 3/8*	70 | *2 3/4*	12	**146.341**

3 Scrubs, with Handle Hole 23 Ø

Filling	Rows	L mm | *inch*	B mm | *inch*	A mm | *inch*	H mm | *inch*	Pack.	Art.-No.
STA straight 0.35 | *0.014"*	6 x 16/17	220 | *8 5/8*	60 | *2 3/8*	225 | *9*	35 | *1 1/2*	12	**148.101**
ROF straight 0.35 | *0.014"*	6 x 16/17	220 | *8 5/8*	60 | *2 3/8*	225 | *9*	35 | *1 1/2*	12	**148.161**
MES crimped 0.25 | *0.010"*	6 x 16/17	220 | *8 5/8*	60 | *2 3/8*	225 | *9*	25 | *1*	12	**148.141**
STA straight 0.25 | *0.010"*	6 x 17/18	240 | *9 1/2*	70 | *2 3/4*	245 | *9 5/8*	35 | *1 1/2*	12	**148.201**
STA straight 0.40 | *0.016"*	7 x 15/16	230 | *9*	65 | *2 1/2*	220 | *8 5/8*	35 | *1 1/2*	12	**148.601***

* Wooden body curved

Dusters

Dusters
Depending on the surrounding and application area, dusters are available in various models and with various filling materials. For coarse and light adherent dirt, dusters with wire filament are ideal.

Next to horse hair we offer dusters with coco filament as a good value alternative.

The duster with polyprophylene filament (straight plastic fibre) can be cleaned easily and therefore other surfaces do not get dirty. Since the water absorption of polypropylene is very low, the duster can be used also under wet conditions.

Further models in special execution with different filling materials and trim length available.

Dusters custom-made
Beside the mentioned models we provide special models with filling material and trim length according to your requirements.

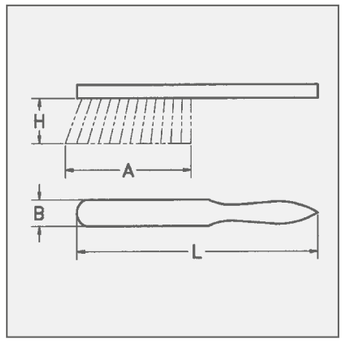

Item Nos. in bold are available ex stock.
Consider our minimum order value for *italic printed* article numbers (see page 139).

STA	= steel wire
MES	= brass wire
PP	= polyprophylene
ROS	= horse hair

PEFC
PEFC/04-31-0389

We are accredited!

Dusters

	Filling	Rows	L mm | *inch*	B mm | *inch*	A mm | *inch*	H mm | *inch*	Pack.	Art.-No.
3	**STA** straight 0.25 | *0.010"*	4	320 | *12 1/2*	35 | *1 1/2*	150 | *6*	60 | *2 3/8*	12	**124.101**
2	**MES** crimped 0.25 | *0.010"*	4	320 | *12 1/2*	35 | *1 1/2*	150 | *6*	40 | *1 3/8*	12	**124.121**
1	**coco**	4	280 | *11*	40 | *1 3/8*	160 | *6 3/8*	70 | *2 3/4*	12	**124.201**
4	**coco**	4	430 | *17*	40 | *1 3/8*	165 | *6 1/2*	70 | *2 3/4*	20	**124.401**
5	**ROS**	6	300 | *12*	43 | *1 3/4*	165 | *6 1/2*	50 | *2*	20	**124.301***
EAN 6	**PP**	4	320 | *12 1/2*	35 | *1 1/2*	175 | *6 7/8*	70 | *2 3/4*	12	**124.801**

* Wooden body varnished

Weed Brushes and Weed Brooms

Weed Brush
This brush with V shaped filling material is ideal for the removal of moss and weeds in joints and edges on pavements, courtyards or cobbled areas.

Due to the long handle an ergonomic and effective working is possible. Without stooping, your back is preserved, though it is possible to remove weeds aggressively and precisely.

The brush with set filling material allows a cleaning of edges and joints which are hard to reach.

Weed Broom
As well as the weed brush, the weed broom is a brush for outdoors.
Ideally moss and weeds can be removed from terrace boards or cobblestones. An easy and clean working without stooping makes the brush to an effective broom with depth effects. High quality, with brass coated steel wires guarantee a long lifetime of the brush in the well known Lessmann quality „Made in Germany".

All standard hand brushes have a bar code stamp and LESSMANN-imprint.

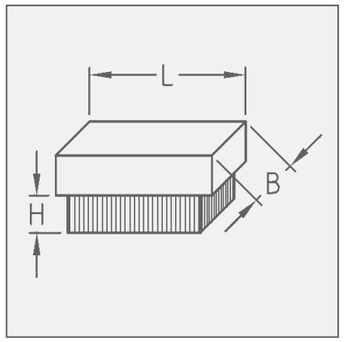

Displaybox

Item Nos. in bold are available ex stock.
Consider our minimum order value for *italic printed* article numbers (see page 139).

STA = steel wire
STM = brass coated steel

EAN

Weed Brushes, with Handle Hole 23 Ø

	Filling	L	B	H	Rows	Pack.	Art.-No.
	without handle	mm | *inch*	mm | *inch*	mm | *inch*			
1	**STA** 0.35 | *0.014"*	100 | *4*	35 | *1 1/2*	36 | *1 1/2*	3	25	**151.108**
2	**STM** 0.35 | *0.014"* Filling set in working direction	100 | *4*	35 | *1 1/2*	36 | *1 1/2*	3	25	**151.511**
3	**STA** 0.35 | *0.014"* with scraper	100 | *4*	35 | *1 1/2*	42 | *1 5/8*	3	25	**151.109**
	with handle, 1400 mm long, Ø 28 mm, incl. Displaybox						
4	**STA** 0.35 | *0.014"*	100 | *4*	35 | *1 1/2*	36 | *1 1/2*	3	30	*151.991.07**
	STM 0.35 | *0.014"* Filling set in working direction	100 | *4*	35 | *1 1/2*	36 | *1 1/2*	3	30	*151.995.07**

EAN

Weed Broom, with Handle Hole 23 Ø

	Filling	L	B	H	Rows	Pack.	Art.-No.
	without handle	mm | *inch*	mm | *inch*	mm | *inch*			
5	**STM** 0.50 | *0.020"*	140 | *5 1/2*	60 | *2 3/8*	70/60 | *2 3/4 /2 3/8*	10/9	16	**152.510**
	with handle, 1400 mm long, Ø 28 mm, incl. Displaybox						
	STM 0.50 | *0.020"*	140 | *5 1/2*	60 | *2 3/8*	70/60 | *2 3/4 /2 3/8*	10/9	12	**152.995.07***

* Delivery only in full packaging units.

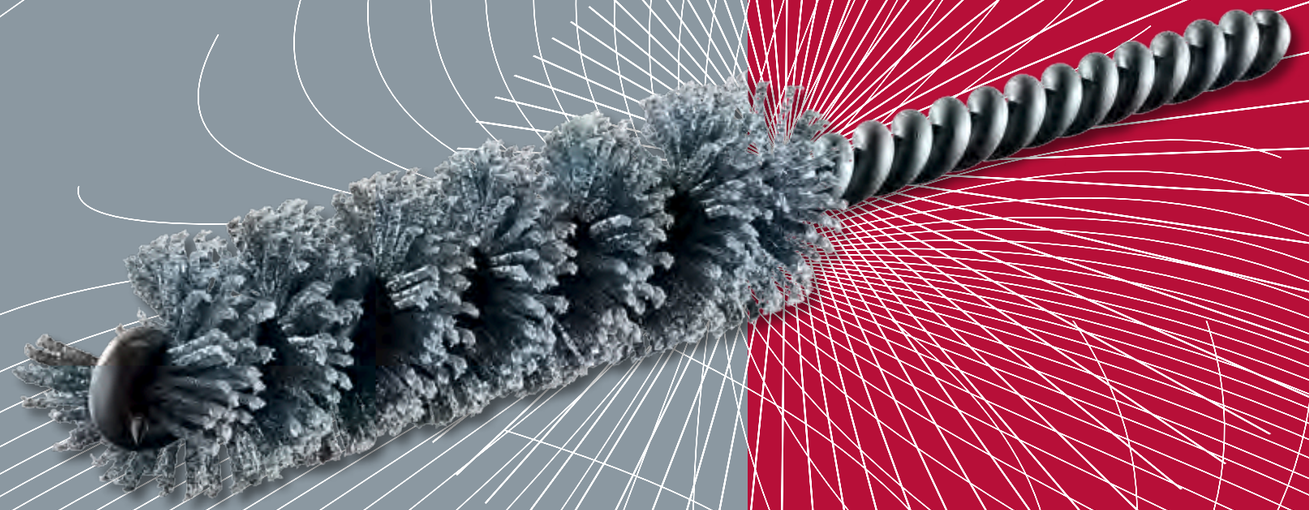

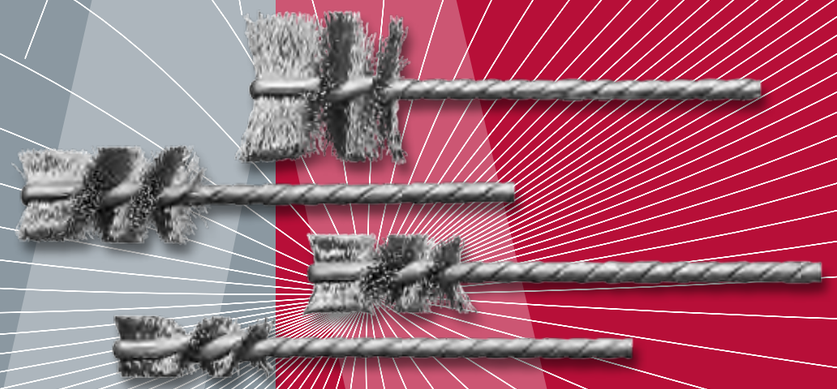

Micro Interior Brushes

Interior brushes with zinc coated twisted wire and single spiral
Due to the filling of aluminium oxide or silicon carbide their usage is more flexible than with conventional interior brushes.

Interior brushes with abrasive filaments are usually used for deburring bores, cross bores, o-ring recesses and for polishing and cleaning small bores.

Due to the flexible surface of the bristles the interior brushes suit to the contour of the bore and areas which are hard to reach can be treated. Abrasive bristles also have grinding effects on the side. That allows a rounding of the edges also on cross bores.

Also brushes with **diamond** filling are available, that causes an even more aggressive surface of the brush.

Micro Interior Brushes, Steel Wire
Micro interior brushes with steel wire are used as thread brushes for descaling, deburring or cleaning:
- Cross corners
- Crossovers
- Tap holes
- Slots

The brushes can be used either manually or mechanically.

Please do not hesitate to contact us, we will also find for special applications a compatible solution. Due to a fully automated production, LESSMANN offers high quality to reasonable prices.

Mechanical Application
Only use the brush with the indicated maximal peripheral speed (RPM max.). The max. RPM only is allowed when the brush is clamped min. for 10 mm into the tool. When the brush is inserted into the suitable work piece, higher RPMs are possible. Only use the brush right rotating.

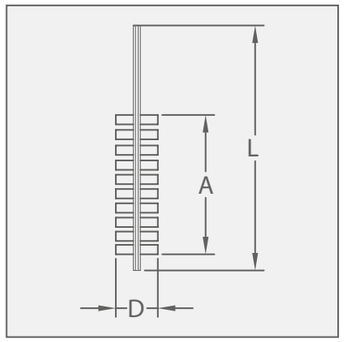

Item Nos. in bold are available ex stock.
Consider our minimum order value for *italic printed* article numbers (see page 139).

AO = aluminium oxide bristles

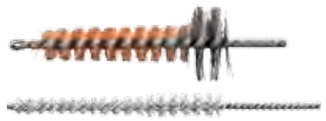

Stainless Steel Brushes
Information on working on stainless steel you find at www.lessmann.com

Mikro Interior Brushes are also available with special contours, e.g. **layered cut.**

Please ask for our special leaflet „Interior Brushes".

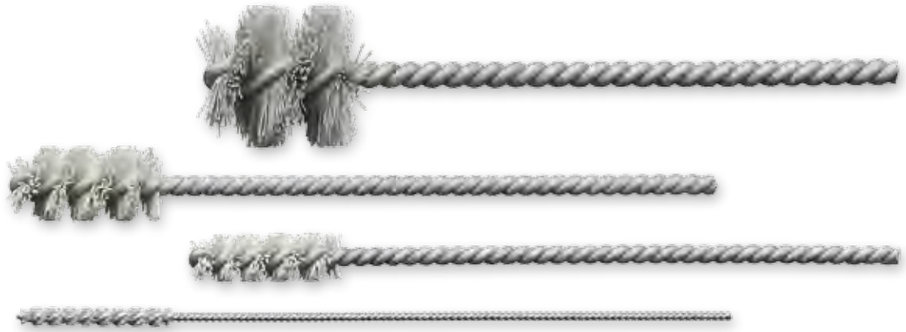

Microabrasive Interior Brushes IBE, Aluminum Oxide Bristles

D mm | *inch*	L mm | *inch*	A mm | *inch*	Shank Ø mm | *inch*	RPM max.	Pack.	AO 600/0.30 Art.-No.	AO 1000/0.25 Art.-No.
3.2 | *1/8*	125 | *5*	25 | *1*	1.5 | *9/16*	800	10	**541.084**	*540.067*
4.2 | *5/32*	125 | *5*	25 | *1*	2.2 | *1/12*	1,000	10	**541.045**	*540.068*
4.8 | *3/16*	125 | *5*	25 | *1*	2.2 | *1/12*	1,000	10	**541.083**	*540.069*
5.5 | *7/32*	125 | *5*	25 | *1*	2.2 | *1/12*	1,000	10	**541.079**	*540.070*
6.6 | *1/4*	125 | *5*	25 | *1*	2.5 | *1/10*	1,000	10	**541.037**	*540.071*
8.2 | *5/16*	125 | *5*	25 | *1*	3.2 | *1/8*	2,000	10	**541.076**	*540.072*
9.8 | *3/8*	125 | *5*	25 | *1*	3.2 | *1/8*	2,000	10	**541.077**	*540.073*
11.5 | *7/16*	125 | *5*	25 | *1*	3.7 | *1/7*	2,000	10	**541.085**	*540.074*
13 | *1/2*	125 | *5*	25 | *1*	3.7 | *1/7*	2,000	10	**541.087**	*540.075*
16 | *5/8*	125 | *5*	25 | *1*	3.7 | *1/7*	2,000	10	**541.089**	*540.076*
20 | *3/4*	125 | *5*	25 | *1*	4.7 | *3/16*	2,000	10	**541.093**	*540.077*
25 | *1*	125 | *5*	25 | *1*	4.7 | *3/16*	2,000	10	**541.095**	*540.078*

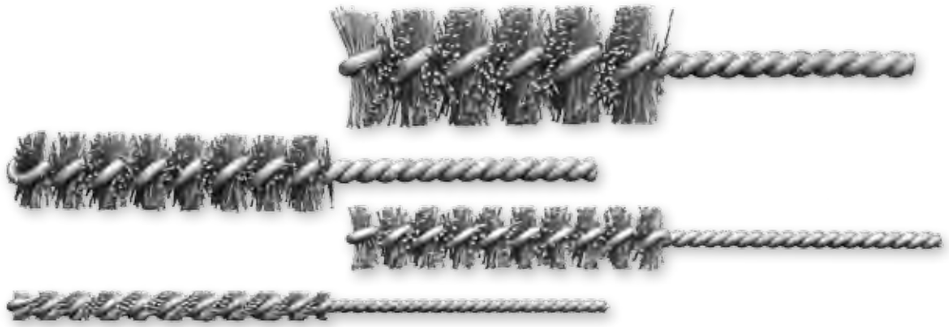

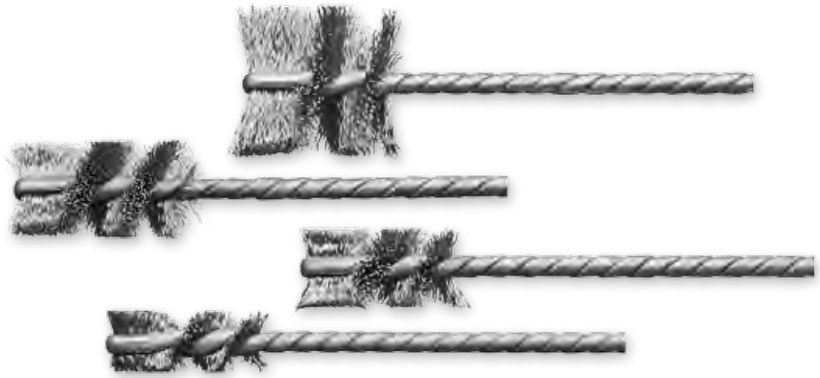

Microabrasive Interior Brushes IBE, Silicon Carbide Bristles

D mm | *inch*	L mm | *inch*	A mm | *inch*	Shank Ø mm | *inch*	RPM max.	Pack.	**SIC 120/0.6** Art.-No.	**SIC 320/0.6** Art.-No.	**SIC 1000/0.25** Art.-No.
1.2 | *3/64*	100 | *4*	12 | *1/2*	0.7 | *1/32*	500	10			**545.200.12**
1.9 | *9/128*	100 | *4*	18 | *5/8*	0.7 | *1/32*	500	10			**545.200.19**
2.2 | *5/64*	100 | *4*	18 | *5/8*	0.9 |	1,000	10			**545.200.22**
2.6 | *7/64*	100 | *4*	25 | *1*	1.0 | *3/64*	1,000	10			**545.200.26**
3.2 | *1/8*	100 | *4*	25 | *1*	1.7 | *1/16*	1,000	10			**545.200.32**
4.2 | *5/32*	125 | *5*	25 | *1*	2.2 | *1/12*	1,000	10			**545.200.42**
5.5 | *7/32*	125 | *5*	25 | *1*	2.2 | *1/12*	1,000	10			*545.200.55*
6 | *1/4*	125 | *5*	65 | *2 1/2*	3.0 | *1/8*	1,500	10	**541.200.60**	**543.200.60**	*545.200.60*
8 | *5/16*	125 | *5*	65 | *2 1/2*	3.0 | *1/8*	1,500	10	**541.200.80**	**543.200.80**	*545.200.80*
10 | *3/8*	125 | *5*	65 | *2 1/2*	3.7 | *1/7*	2,000	10	**541.201.00**	**543.201.00**	*545.201.00*
13 | *1/2*	125 | *5*	65 | *2 1/2*	3.7 | *1/7*	2,000	10	**541.201.30**	**543.201.30**	*545.201.30*
16 | *3/8*	125 | *5*	65 | *2 1/2*	5.2 | *1/5*	2,000	10	**541.201.60**	**543.201.60**	*545.201.60*
19 | *3/4*	125 | *5*	65 | *2 1/2*	5.2 | *1/5*	2,000	10	**541.201.90**	**543.201.90**	*545.201.90*
22 | *7/8*	125 | *5*	65 | *2 1/2*	5.7 | *7/32*	2,000	10	**541.202.20**	**543.202.20**	*545.202.20*
25 | *1*	125 | *5*	65 | *2 1/2*	5.7 | *7/32*	2,000	10	**541.202.50**	**543.202.50**	*545.202.50*
28 | *1*	125 | *5*	65 | *2 1/2*	5.7 | *7/32*	2,000	10	**541.202.80**	**543.202.80**	*545.202.80*
30 | *1 1/4*	125 | *5*	65 | *2 1/2*	5.7 | *7/32*	2,000	10	**541.203.00**	**543.203.00**	*545.203.00*
32 | *1 1/4*	125 | *5*	65 | *2 1/2*	5.7 | *7/32*	2,000	10	**541.203.20**	*543.203.20*	*545.203.20*

Micro Interior Brushes IBH, Steel Wire, Stainless Steel Wire

D mm | *inch*	L mm | *inch*	A mm | *inch*	Shank Ø mm | *inch*	RPM max.	Pack.	**STH 0.12** | *0.005"* Art.-No.	**STH 0.20** | *0.008"* Art.-No.	**ROH 0.12** | *0.005"* Art.-No.	**ROH 0.20** | *0.008"* Art.-No.
6 | *1/4*	90 | *3 1/2*	25 | *1*	3.2 | *1/8*	3,500	10	**564.220.60**			
8 | *5/16*	90 | *3 1/2*	25 | *1*	3.2 | *1/8*	3,500	10	**564.220.80**			
10 | *3/8*	90 | *3 1/2*	25 | *1*	3.8 | *5/32*	3,500	10	**565.321.00**	**565.341.00**	**565.521.00**	
13 | *1/2*	90 | *3 1/2*	25 | *1*	3.8 | *5/32*	3,500	10	**565.321.30**	**565.341.30**	**565.521.30**	
16 | *5/8*	90 | *3 1/2*	25 | *1*	3.8 | *5/32*	3,000	10	**565.321.60**	**565.341.60**	**565.521.60**	*565.541.60*
19 | *3/4*	90 | *3 1/2*	25 | *1*	3.8 | *5/32*	3,000	10	**565.321.90**	**565.341.90**	*565.521.90*	*565.541.90*
20 | *3/4*	90 | *3 1/2*	25 | *1*	3.8 | *5/32*	3,000	10		*565.432.00*		
21 | *53/64*	90 | *3 1/2*	25 | *1*	3.8 | *5/32*	3,000	10	*565.322.10*	*565.342.10*		
24 | *1*	90 | *3 1/2*	25 | *1*	3.8 | *5/32*	3,000	10	*565.322.40*			
25 | *1*	90 | *3 1/2*	25 | *1*	3.8 | *5/32*	3,000	10	**565.322.50**	**565.342.50**	565.522.50	**565.542.50**
29 | *1 1/8*	90 | *3 1/2*	25 | *1*	3.8 | *5/32*	3,000	10	*565.322.90*	*565.342.90*		*565.542.90*
32 | *1 1/4*	90 | *3 1/2*	25 | *1*	3.8 | *5/32*	3,000	10	*565.323.20*	*565.343.20*		*565.543.20*

Mechanical Application
Only use the brush with the indicated maximal peripheral speed (RPM max.). The max. RPM only is allowed when the brush is clamped min. for 10 mm into the tool. When the brush is inserted into the suitable work piece, higher RPMs are possible. Only use the brush right rotating.

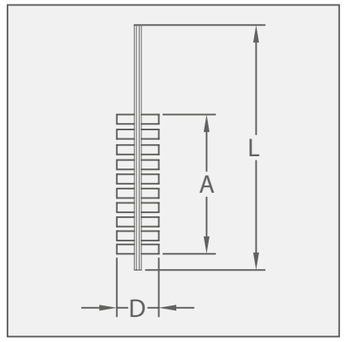

Item Nos. in bold are available ex stock.
Consider our minimum order value for *italic printed* article numbers (see page 139).

STH = steel wire, high tensile
ROH = stainless steel wire, high tensile
SIC = silicon carbide bristles

Cylinder Brushes

Cylinder Brushes
For manual cleaning and deburring of tubes, bores etc. Cylinder brushes are also available in other dimensions and materials. When ordering special sizes please mention full specification: total length, filling length, filling material, diameter and quantity.

Cylinder brushes, flat filament
These flat brushes with fine, crimped steel wire are ideal for cleaning areas which are hard to reach. A typical application is removing isolation rests in channels of stators or electric motors.

Stainless Steel Brushes
Information on working on stainless steel you find at www.lessmann.com

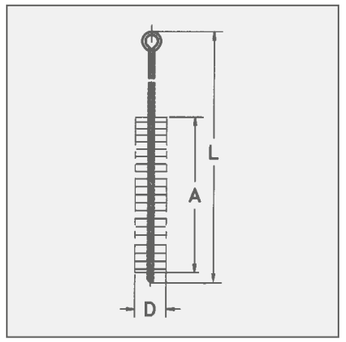

Item Nos. in bold are available ex stock.
Consider our minimum order value for *italic printed* article numbers (see page 139).

STA = steel wire
ROF = stainless steel wire
MES = brass wire
PA = polyamide

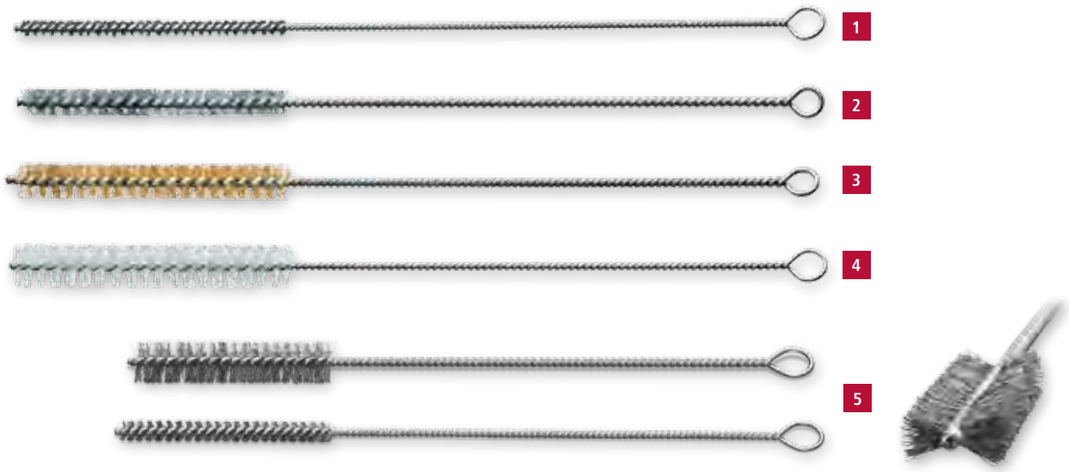

INTERIOR BRUSHES

Cylinder Brushes with Loop IBZ

D mm | *inch*	L mm | *inch*	A mm | *inch*	Pack.	1 STA Art.-No.	2 ROF Art.-No.	3 MES Art.-No.	4 PA Art.-No.
3 | *1/8*	300 | *12*	100 | *4*	10	**542.381**	**542.541**	**542.741**	**542.881**
4 | *1/8*	300 | *12*	100 | *4*	10	**542.351**	**542.508**	**542.740**	**542.823**
5 | *1/8*	300 | *12*	100 | *4*	10	**542.347**	**542.538**	**542.739**	**542.822**
6 | *1/4*	300 | *12*	100 | *4*	10	**542.301**	**542.501**	**542.701**	**542.801**
8 | *5/16*	300 | *12*	100 | *4*	10	**542.302**	**542.502**	**542.702**	**542.802**
10 | *3/8*	300 | *12*	100 | *4*	10	**542.303**	**542.503**	**542.703**	**542.803**
12 | *3/8*	300 | *12*	100 | *4*	10	**542.304**	**542.504**	**542.704**	**542.804**
13 | *1/2*	300 | *12*	100 | *4*	10	**542.305**	available on demand	**542.705**	available on demand
14 | *1/2*	300 | *12*	100 | *4*	10	**542.306**	*542.506*	**542.706**	**542.812**
15 | *5/8*	300 | *12*	100 | *4*	10	**542.307**	**542.507**	**542.707**	**542.807**
18 | *5/8*	300 | *12*	100 | *4*	10	**542.309**	available on demand	**542.709**	**542.818**
20 | *3/4*	300 | *12*	100 | *4*	10	**542.311**	**542.511**	**542.711**	**542.811**
25 | *1*	300 | *12*	100 | *4*	10	**542.313**	**542.513**	**542.713**	**542.813**
30 | *1*	300 | *12*	100 | *4*	10	**542.315**	**542.515**	**542.715**	**542.815**
40 | *1 3/8*	300 | *12*	100 | *4*	10	**542.319**	*542.519*	**542.719**	**542.819**
50 | *2*	300 | *12*	100 | *4*	10	**542.320**	*542.520*	**542.720**	**542.820**

5 Cylinder brushes, flat filament with Loop IBZ

D mm | *inch*	L mm | *inch*	A mm | *inch*	Pack.	STA 0,15 Art.-No.	STA 0,20 Art.-No.
13 | *1/2*	350 | *14*	10 | *4*	10	**559.810**	
20 | *3/4*	350 | *14*	10 | *4*	10	**559.806**	
26 | *1*	350 | *14*	10 | *4*	10		**559.802**
32 | *1 1/4*	350 | *14*	10 | *4*	10		**559.803**
38 | *1 1/2*	350 | *14*	10 | *4*	10		**559.804**
	350 | *14*	10 | *4*	10		**559.805**
	350 | *14*	10 | *4*	10		**559.807**

Hole Cleaning Brushes

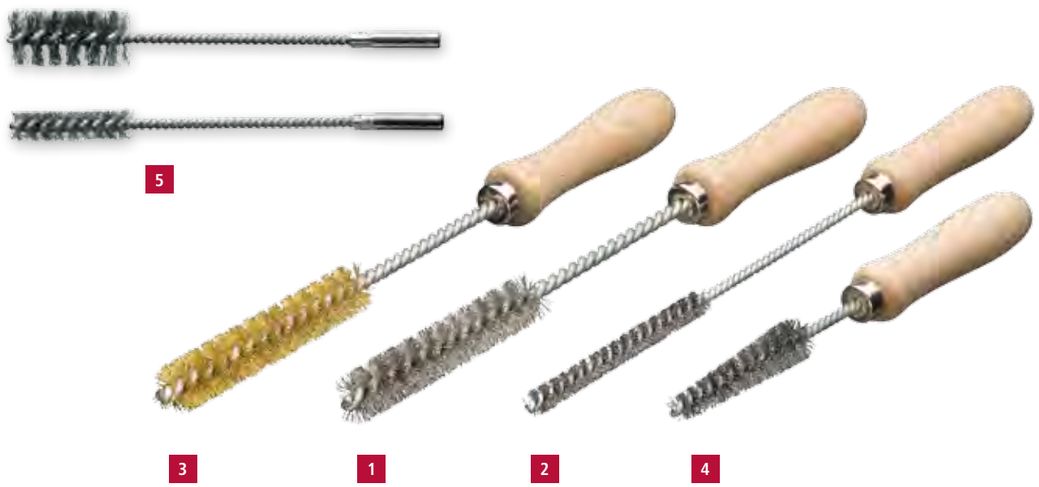

Hole cleaning Brushes with Wooden Handle IBM

	D mm | *inch*	L mm | *inch*	A mm | *inch*	Pack.	1 STA Art.-No.	2 ROF Art.-No.	3 MES Art.-No.
	10 | *3/8*	300 | *12*	100 | *4*	10	**560.310**	**560.510**	**560.710**
	15 | *5/8*	300 | *12*	100 | *4*	10	**560.315**	**560.515**	**560.715**
	20 | *3/4*	300 | *12*	100 | *4*	10	**560.320**	**560.520**	**560.720**
	25 | *1*	300 | *12*	100 | *4*	10	**560.325**	**560.525**	**560.725**
	30 | *1 1/4*	300 | *12*	100 | *4*	10	**560.330**	**560.530**	**560.730**
4	10/18 | *3/8 / 5/8*	200 | *8*	70 | *2 3/4*	10	**561.304***		

* conical filling

5 Cylinder Brushes with Shank 8 mm Ø IBG

D mm | *inch*	L mm | *inch*	A mm | *inch*	RPM max.	Pack.	STA Art.-No.
13 | *1/2*	200 | *8*	55 | *2 1/4*	1,000	10	**503.311**
20 | *3/4*	200 | *8*	55 | *2 1/4*	1,000	10	**503.313**
26 | *1*	200 | *8*	55 | *2 1/4*	800	10	**503.314**
32 | *1 1/4*	200 | *8*	55 | *2 1/4*	800	10	**503.316**
38 | *1 1/2*	200 | *8*	55 | *2 1/4*	800	10	**503.318**

Hole Cleaning Brushes
Those hole cleaning brushes have a wooden handle. Hence the brushes allow a very comfortable working in various application fields.

Typically the brushes are used in construction industry or handcraft business for cleaning bore holes or slots.

Besides, Hole Cleaning Brushes are ideal for cleaning threads or deburring cross holes.

The model 561.304 has the filling material conically cut.

Mechanical Application
Only use the brush with the indicated maximal peripheral speed (RPM max.). The max. RPM only is allowed when the brush is clamped min. for 10 mm into the tool. When the brush is inserted into the suitable work piece, higher RPMs are possible. Only use the brush right rotating.

Bore Hole Cleaning Brushes

Interior Brushes for bore hole cleaning IBE, Steel, without Thread

D mm | *inch*	L mm | *inch*	A mm | *inch*	Suitable for bore hole mm | *inch*	RPM max.	Pack.	STA 0.10 | *0.004"* Art.-No.	STA 0.15 | *0.006"* Art.-No.	STA 0.20 | *0.008"* Art.-No.
12 | *1/2*	130 | *5 1/8*	80 | *3*	10 | *3/8*	1,500	10	**504.301**		
14 | *1/2*	140 | *5 1/2*	80 | *3*	12 | *1/2*	1,500	10	*504.302*		
16 | *5/8*	180 | *7*	80 | *3*	14 | *1/2*	800	10		**504.333**	
20 | *3/4*	200 | *8*	100 | *4*	18 | *5/8*	800	10		**504.334**	
24 | *1*	220 | *8 5/8*	100 | *4*	22 | *7/8*	800	10		**504.335**	
26 | *1*	250 | *10*	100 | *4*	24 | *1*	500	10			**504.346**
28 | *1*	290 | *11 3/8*	100 | *4*	26 | *1*	500	10			**504.347**

Bore Hole Cleaning Brushes IBG, Stainless Steel, with Thread

D mm | *inch*	L mm | *inch*	A mm | *inch*	Suitable for bore hole mm | *inch*	Thread	Pack.	ROF 0.10 | *0.004"* Art.-No.	ROF 0.15 | *0.006"* Art.-No.	ROF 0.20 | *0.008"* Art.-No.
12 | *1/2*	130 | *5 1/8*	80 | *3*	10 | *3/8*	M 6	10	**504.501.06**		
14 | *1/2*	140 | *5 1/2*	80 | *3*	12 | *1/2*	M 6	10	**504.502.06**		
16 | *5/8*	180 | *7*	80 | *3*	14 | *1/2*	M 6	10		**504.533.06**	
20 | *3/4*	200 | *8*	100 | *4*	18 | *5/8*	M 6	10		*504.534.06*	
24 | *1*	220 | *8 5/8*	100 | *4*	22 | *7/8*	M 6	10		*504.535.06*	
26 | *1*	250 | *10*	100 | *4*	24 | *1*	M 6	10			*504.546.06*
28 | *1*	290 | *11 3/8*	100 | *4*	26 | *1*	M 6	10			*504.547.06*

Bore Hole Cleaning Brushes
These interior brushes are used in the mounting techniques. The brushes are ideal for cleaning bore holes in most different materials. Afterwards screws and anchors can be inserted easily in the bore hole.

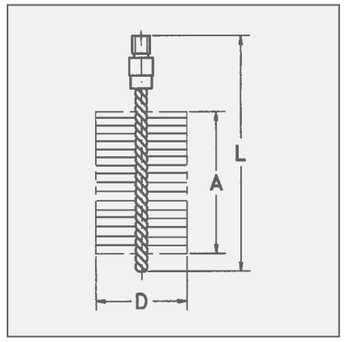

Item Nos. in bold are available ex stock.
Consider our minimum order value for *italic printed* article numbers (see page 139).

STA = steel wire
ROF = stainless steel wire
MES = brass wire

Tube and Sleeve Brushes

Interior Brushes
These brushes are varied for many different uses: not only for cleaning of tubes, gratings, sleeves and cylinders. Interior brushes regulate current velocity in tubing systems. They are similar to the double spiral tube brushes for deburring cross drillings etc. On these pages are shown standard brushes, single spiral having two drilling wires and the double spiral having four.

Sleeve Brushes
Sleeve brushes have a double spiral and are particularly stable types of tube brushes whose trimming is cut to a conical point. Used in machines they are beneficial for cleaning the sleeves (internal threads) of containers, e.g. after galvanisation.

Recommendation for users: When using twisted brushes on machines please use only in a clockwise running direction. Failure to do so may cause the brush wire to open up.

Brushes with doublespiral
Brushes with a double spiral are mainly used for the treatment of larger diameters or for the treatment of hard materials. A double spiral is more stable and has a higher resistance against untwisting. Hence the brushes can be exposed to higher loads.

Stainless Steel Brushes
Information on working on stainless steel you find at www.lessmann.com

Special diameters
Minimum order € 125.00
Extra charge: Gross per piece
10 - 49 pcs + 50 %
50 - 99 pcs + 25 %
100 pcs and more + 10 %

Special threads under reserve
Extra charge: Gross per piece
10 - 19 pcs + € 5.00
20 - 49 pcs + € 4.00
50 - 99 pcs + € 3.00
100 pcs and more + € 2.00

For all brushes with thread M 6, M 10, W 1/2" and W 3/8" a practical hanger assembly is available for presenting the brushes individually. More information you find on the pages 120 and 123.

Suitable thread adapter,
see on page 113
Handles and Extension Pieces
see on page 113

On request tube brushes are also available with other measurements, other filling materials or other threads.

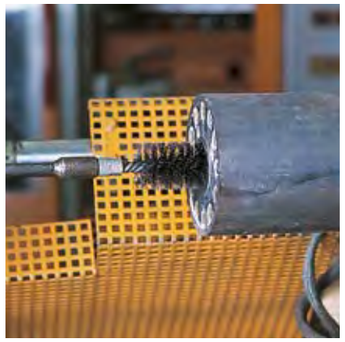

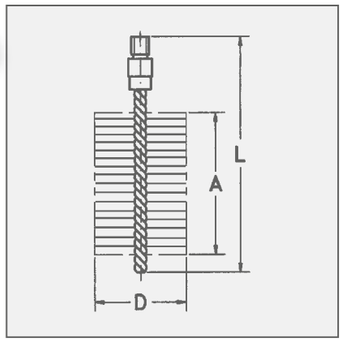

Item Nos. in bold are available ex stock.
Consider our minimum order value for *italic printed* article numbers (see page 139).

STA	= steel wire
ROF	= stainless steel wire
MES	= brass wire
PA	= polyamide
SIC	= silicon carbide bristles

INTERIOR BRUSHES

Tube Brushes with external Thread IBG

D	L	A	Thread	Pack.	1 STA crimped Art.-No.	1 ROF crimped Art.-No.	2 MES crimped Art.-No.	3 | 4 PA straight Art.-No.
Single Spirale								
mm | *inch*	mm | *inch*	mm | *inch*						
6 | *1/4*	115 | *4 1/2*	80 | *3*	M 4	10	**501.301**	**501.501**	**501.701**	**501.801**
8 | *5/16*	115 | *4 1/2*	80 | *3*	M 6	10	**500.308**	**500.508**	**500.708**	**500.808**
10 | *3/8*	115 | *4 1/2*	80 | *3*	M 6	10	**500.310**	**500.510**	**500.710**	**500.810**
12 | *1/2*	115 | *4 1/2*	80 | *3*	M 6	10	**500.312**	**500.512**	**500.712**	**500.812**
13 | *1/2*	115 | *4 1/2*	80 | *3*	M 6	10	**500.313**	**500.513**	**500.713**	**500.813**
14 | *9/16*	115 | *4 1/2*	80 | *3*	M 6	10	**500.314**	**500.514**	**500.714**	**500.814**
15 | *5/8*	115 | *4 1/2*	80 | *3*	M 6	10	**500.315**	**500.515**	**500.715**	**500.815**
16 | *5/8*	115 | *4 1/2*	80 | *3*	M 6	10	**500.316**	**500.516**	**500.716**	**500.816**
18 | *5/8*	115 | *4 1/2*	80 | *3*	M 6	10	**500.318**	**500.518**	**500.718**	**500.818**
19 | *3/4*	115 | *4 1/2*	80 | *3*	M 6	10	**500.319**	**500.519**	**500.719**	**500.819**
20 | *3/4*	115 | *4 1/2*	80 | *3*	M 6	10	**500.320**	**500.520**	**500.720**	**500.820**

5 Interior Brushes with external thread IBG, Silicon Carbid Bristles

D	L	A	Thread	Pack.	SIC 180/0.9 Art.-No.
Single Spirale					
mm | *inch*	mm | *inch*	mm | *inch*			
10 | *3/8*	115 | *4 1/2*	80 | *3*	M 6	10	*500.010*
16 | *5/8*	115 | *4 1/2*	80 | *3*	M 6	10	*500.016*
20 | *3/4*	150 | *6*	100 | *4*	W 1/2	10	*502.050.24*
22 | *7/8*	150 | *6*	100 | *4*	W 1/2	10	*502.052.24*
25 | *1*	150 | *6*	100 | *4*	W 1/2	10	*502.055.24*
28 | *1*	150 | *6*	100 | *4*	W 1/2	10	*502.058.24*

Tube/Sleeve brushes

Tube Brushes with external Thread W 1/2

				1	2	3	4	5
				Single Spirale IBG				Double Spirale IBGD
D	L	A	Pack.	STA straight	ROF straight	MES crimped	PA straight	STA straight
mm | *inch*	mm | *inch*	mm | *inch*		Art.-Nr.	Art.-Nr.	Art.-Nr.	Art.-Nr.	Art.-Nr.
20 | *3/4*	150 | *6*	100 | *4*	10	**502.120.24**	**502.420.24**	**502.720.24**	**502.820.24**	**522.120.24**
22 | *7/8*	150 | *6*	100 | *4*	10	**502.122.24**	**502.422.24**	**502.722.24**	**502.822.24**	**522.122.24**
25 | *1*	150 | *6*	100 | *4*	10	**502.125.24**	**502.425.24**	**502.725.24**	**502.825.24**	**522.125.24**
28 | *1*	150 | *6*	100 | *4*	10	**502.128.24**	**502.428.24**	**502.728.24**		**522.128.24**
30 | *1 1/4*	160 | *6 3/8*	100 | *4*	10	**506.130**	**506.430**	**506.730**	**506.830**	**526.130**
32 | *1 1/4*	160 | *6 3/8*	100 | *4*	10	**506.132**	**506.432**	**506.732**	**506.832**	**526.132**
35 | *1 1/2*	160 | *6 3/8*	100 | *4*	10	**506.135**	**506.435**	**506.735**	**506.835**	**526.135**
38 | *1 1/2*	160 | *6 3/8*	100 | *4*	10	**506.138**	**506.438**	**506.738**	**506.838**	**526.138**
40 | *1 3/8*	160 | *6 3/8*	100 | *4*	10	**506.140**	**506.440**	**506.740**	**506.840**	**526.140**
44 | *1 3/4*	160 | *6 3/8*	100 | *4*	5	**506.144**	**506.444**	**506.744**	**506.844**	**526.144**
50 | *2*	160 | *6 3/8*	100 | *4*	5	**506.150**	**506.450**	**506.750**	**506.850**	**526.150**
57 | *2 1/4*	160 | *6 3/8*	100 | *4*	5	**506.157**	**506.457**	**506.757**	**506.857**	**526.157**
63 | *2 1/2*	160 | *6 3/8*	100 | *4*	5	**506.163**	**506.463**	**506.763**	**506.863**	**526.163**
69 | *2 3/4*	160 | *6 3/8*	100 | *4*	5	**506.169**	*506.469*	**506.769**	**506.869**	**526.169**
75 | *3*	160 | *6 3/8*	100 | *4*	5	**506.175**	**506.475**	**506.775**	**506.875**	**526.175**
82 | *3 1/4*	160 | *6 3/8*	100 | *4*	5	**506.182**	**506.482**	**506.782**	*506.882*	**526.182**
88 | *3 3/8*	160 | *6 3/8*	100 | *4*	5	**506.188**	*506.488*	*506.788*	*506.888*	**526.188**
94 | *3 5/8*	160 | *6 3/8*	100 | *4*	5	**506.194**	*506.494*	*506.794*	*506.894*	**526.194**
101 | *4*	160 | *6 3/8*	100 | *4*	5	**506.101**	**506.401**	**506.701**	**506.801**	**526.101**
125 | *5*	160 | *6 3/8*	100 | *4*	5	**506.106**	available on demand	available on demand	*506.806*	**526.106**
150 | *6*	160 | *6 3/8*	100 | *4*	5	**506.211**	available on demand	available on demand	*506.811*	available on demand
200 | *8*	160 | *6 3/8*	100 | *4*	5	**506.220**	available on demand	*506.720*	*506.820*	available on demand

Mechanical Application
Only use the brush with the indicated maximal peripheral speed (RPM max.). The max. RPM only is allowed when the brush is clamped min. for 10 mm into the tool. When the brush is inserted into the suitable work piece, higher RPMs are possible. Only use the brush right rotating.

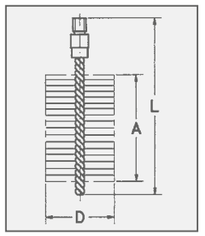

Item Nos. in bold are available ex stock.
Consider our minimum order value for *italic printed* article numbers (see page 139).

STA = steel wire
ROF = stainless steel wire
MES = brass wire
PA = polyamide

Tube Brushes with internal Thread / Boiler Brushes IBG

	D	L	A	Thread	Pack.	STA straight	PA straight
	mm | *inch*	mm | *inch*	mm | *inch*			Art.-No.	Art.-No.
	Single Spirale						
1	30 | *1 1/4*	160 | *6 1/4*	100 | *4*	M 10i	10	*506.130.60*	
1	40 | *1 3/8*	160 | *6 1/4*	100 | *4*	M 10i	10	*506.140.60*	
1	50 | *2*	160 | *6 1/4*	100 | *4*	M 10i	10	*506.150.60*	
1	60 | *2 3/8*	160 | *6 1/4*	100 | *4*	M 10i	10	*506.160.60*	
1	80 | *3*	160 | *6 1/4*	100 | *4*	M 10i	10	*506.180.60*	
1	90 | *3 1/2*	160 | *6 1/4*	100 | *4*	M 10i	10	**507.190**	
1	101 | *4*	160 | *6 1/4*	100 | *4*	M 10i	10	*506.101.60*	
1	120 | *4 3/4*	160 | *6 1/4*	100 | *4*	M 10i	10	**507.105**	*506.805.60*
2	20 x 30 | *3/4 / 1 1/4*	140 | *5 1/2*	80 | *3*	M 10i	10	**533.405**	
2	15 x 30 | *5/8 / 1 1/4*	160 | *6 1/4*	100 | *4*	M 10i	10	*533.408*	
2	30 x 50 | *1 1/4 / 2*	160 | *6 1/4*	100 | *4*	M 10i	10	*532.218.60*	
2	40 x 90 | *1 3/8 / 3 1/2*	160 | *6 1/4*	100 | *4*	M 10i	10	*532.214.60*	
2	50 x 100 | *2 / 4*	160 | *6 1/4*	100 | *4*	M 10i	10	*532.303.60*	

Suitable back board brushes you find at page 111.

Sleeves Brushes Conical, without Thread IBD

	D	L	A	RPM	Pack.	STA straight
	mm | *inch*	mm | *inch*	mm | *inch*	max.		Art.-No.
	Double Spirale					
3	10/20 | *3/8 / 3/4*	170 | *6 3/4*	100	1,000	10	**549.101**
3	15/25 | *5/8 / 1*	170 | *6 3/4*	100	1,000	10	**549.102**
3	20/30 | *3/4 / 1 1/4*	170 | *6 3/4*	100	1,000	10	**549.103**
3	25/35 | *1 / 1 3/8*	170 | *6 3/4*	100	1,000	10	**549.104**
3	32/42 | *1 1/4 / 1 5/8*	170 | *6 3/4*	100	1,000	5	**549.105**
3	40/50 | *1 3/8 / 2*	170 | *6 3/4*	100	1,000	5	**549.106**
3	38/70 | *1 1/2 / 2 3/4*	170 | *6 3/4*	100	1,000	5	**549.107**
3	60/95 | *2 3/8 / 3 3/4*	170 | *6 3/4*	100	1,000	5	**549.108**

On request also tube and sleeve brushes with crimped wire are available.

Boiler Brushes / Stove Pipe Brushes

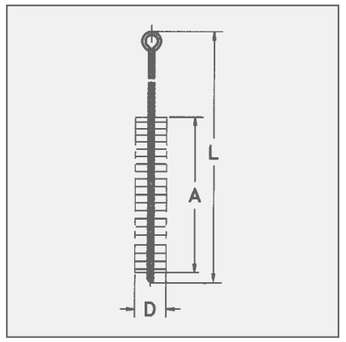

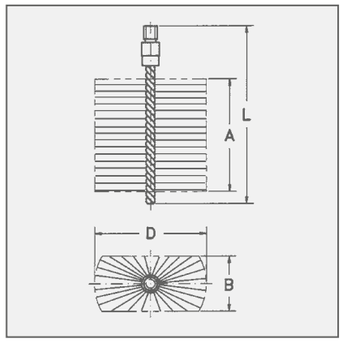

Boiler Brushes
The systematic care of boilers and regular cleaning by brushing increases the boiler efficiency and reduces toxic emissions.

LESSMANN boiler brushes are of outstanding quality made using the best materials and precise manufacturing procedures. Our current programme includes brushes in standard dimensions and special executions. As OEM supplier to important boiler manufacturers we are able to produce large quantities in an efficient way. What is even more important is our know how in meeting the critical tolerances demanded by our customers.

Stove Pipe Brushes
The stove pipe brushes are available in two different executions: with twisted handle (brush and handle one part) or with thread nipple, for screwing and lengthing by using a separate handle.

Handles and Extension Pieces
For tube brushes, boiler brushes and stove pipe brushes, see pages 105 - 107, 109 - 112. The twisted handles have an internal thread and a grip loop, the extension pieces have both an internal thread and an external thread.

Suitable Thread Adapters
see page 113

Item Nos. in bold are available ex stock.
Consider our minimum order value for *italic printed* article numbers (see page 139).

STA = steel wire
PA = polyamide

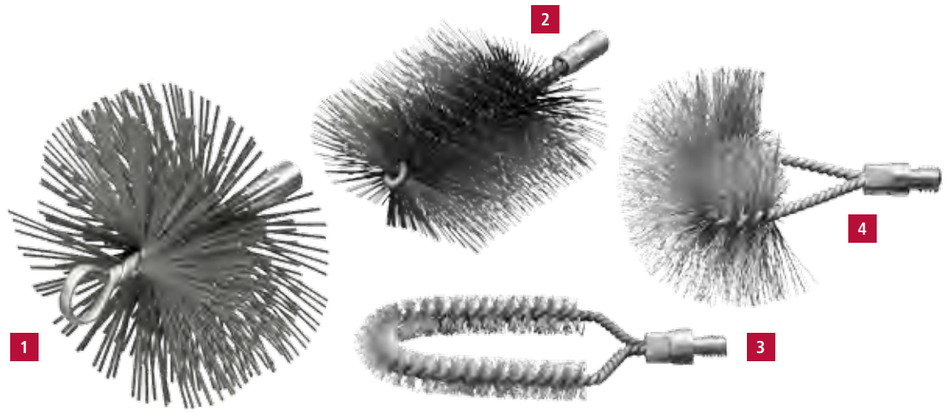

EAN **1 Chimney Brushes with Eye and internal Thread IBZG, Flat Wire 2.0 x 0.40**

Filling	D	L	A	Internal Thread	Pack	Art.-No.	Filling	D	L	A	Internal Thread	Pack	Art.-No.
STA flat	125	160	55	M 12 i	1	**507.007**	**STA** flat	250	160	55	M 12 i	1	**507.004**
STA flat	150	160	55	M 12 i	1	**507.001**	**STA** flat	300	160	55	M 12 i	1	**507.005**
STA flat	175	160	55	M 12 i	1	**507.002**	**STA** flat	350	160	55	M 12 i	1	**507.006**
STA flat	200	160	55	M 12 i	1	**507.003**							

Boiler Brushes with external Thread IBG, Steel Wire, rectangular/curved

	Filling	B mm | *inch*	D mm | *inch*	Format	L mm | *inch*	A mm | *inch*	Thread	Pack.	Art.-No.
2	**PA** straight	30 | *1 1/4*	50 | *2*	rectangular	160 | *6 3/8*	100 | *4*	W 1/2	5	**533.008.24**
2	**PA** straight	50 | *2*	100 | *4*	rectangular	160 | *6 3/8*	100 | *4*	W 1/2	5	*533.010.24*
2	**STA** straight	30 | *1 1/4*	50 | *2*	rectangular	160 | *6 3/8*	100 | *4*	W 1/2	5	*532.218*
2	**STA** straight	30 | *1 1/4*	80 | *3*	rectangular	160 | *6 3/8*	100 | *4*	W 1/2	5	**532.211**
2	**STA** straight	40 | *1 3/8*	80 | *3*	rectangular	160 | *6 3/8*	100 | *4*	W 1/2	5	**532.202**
2	**STA** straight	50 | *2*	100 | *4*	rectangular	160 | *6 3/8*	100 | *4*	W 1/2	5	**532.203**
2	**STA** straight	50 | *2*	120 | *4 3/4*	rectangular	160 | *6 3/8*	100 | *4*	W 1/2	5	**532.205**
3	**STA** crimped	18 | *5/8*	70 | *2 3/4*	curved	160 | *6 3/8*	100 | *4*	W 1/2	5	**529.301.24**
3	**STA** crimped	30 | *1 1/4*	80 | *3*	curved	175 | *6 7/8*	120 | *4 3/4*	W 1/2	5	**529.302**
4	**STA** crimped	80 | *3*	150 | *6*	curved	150 | *6*	120 | *4 3/4*	W 1/2	5	**529.311**
4	**PA** straight	80 | *3*	150 | *6*	curved	150 | *6*	120 | *4 3/4*	W 1/2	5	*529.811*
4	**STA** crimped	80 | *3*	150 | *3 / 6*	curved	150 | *6*	120 | *4 3/4*	M 10i	5	*529.301.60*

Boiler Brushes

1 2 3

Boiler Brushes with Handle IBE

	Filling	B mm | *inch*	D mm | *inch*	Format	L mm | *inch*	A mm | *inch*	Pack.	Art.-No.
1	**PA** straight		20 | *3/4*	round	600 | *23 5/8*	100 | *4*	10	**544.804**
2	**STA** crimped		50 | *2*	round	700 | *27 1/2*	100 | *4*	10	**544.301**
	STA crimped		90 | *3 1/2*	round	600 | *23 5/8*	100 | *4*	10	**544.302**
	STA crimped		10 | *3/8*	round	850 | *33 1/2*	100 | *4*	10	**545.320**
	STA crimped		15 | *5/8*	round	850 | *33 1/2*	100 | *4*	10	*545.321*
	STA crimped		20 | *3/4*	round	850 | *33 1/2*	100 | *4*	10	**545.322**
	STA crimped		25 | *1*	round	850 | *33 1/2*	100 | *4*	10	**545.307**
	STA crimped		35 | *1 1/2*	round	850 | *33 1/2*	100 | *4*	10	**545.311**
	STA crimped		50 | *2*	round	850 | *33 1/2*	100 | *4*	10	**545.312**
	STA crimped		60 | *2 3/8*	round	850 | *33 1/2*	100 | *4*	10	*545.338*
3	**PA** straight	12 | *1/2*	14 | *9/16*	rectangular	600 | *23 5/8*	150 | *6*	10	**554.903**
	STA straight	17 | *5/8*	50 | *2*	rectangular	960 | *38*	60 | *2 3/8*	10	**564.101****
	STA crimped	30 | *1 1/4*	50 | *2*	rectangular	800 | *31 1/2*	100 | *4*	10	**551.801**
	STA crimped	40 | *1 3/8*	50 | *2*	rectangular	1,000 | *39 3/8*	80 | *3*	10	**553.711**
	STA straight	40 | *1 3/8*	80 | *3*	rectangular	1,000 | *39 3/8*	100 | *4*	10	**552.404**
	STA crimped	40 | *1 3/8*	90 | *3 1/2*	rectangular	1,000 | *39 3/8*	80 | *3*	10	**564.301***
	STA straight	50 | *2*	100 | *4*	rectangular	1,000 | *39 3/8*	100 | *4*	10	**552.403**

* Rod made from spring steel 5 Ø | ** with scooped scratcher in the handle

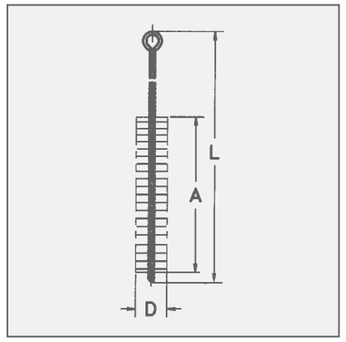

Item Nos. in bold are available ex stock.
Consider our minimum order value for *italic printed* article numbers (see page 139).

STA = steel wire
PA = polyamide

Boiler Brushes-Sets

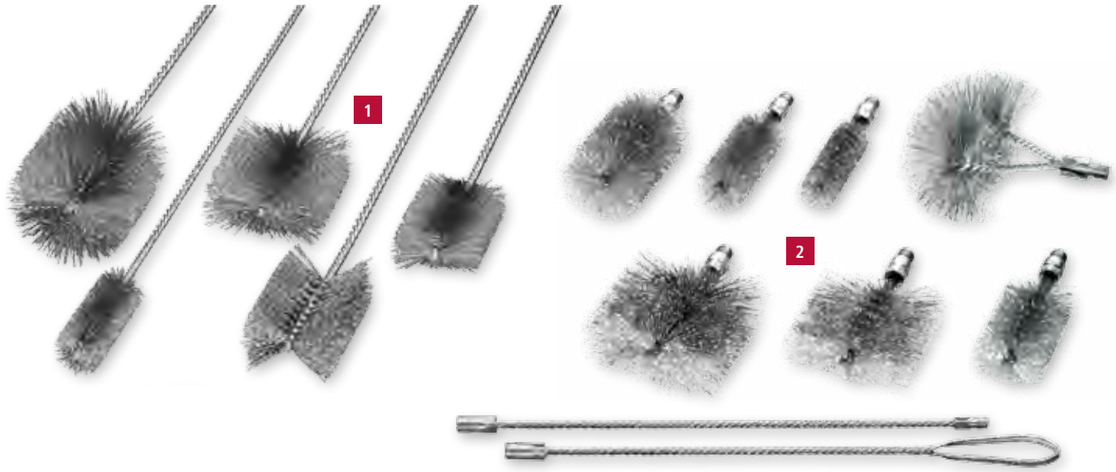

1 2

EAN **1 Brush Set, 5 pieces**

Content: 1 piece each	A	Format	Set with handle, big edition, steel wire: Art.-No.	D	L	Art.-No. Set	Set with handle, small edition, steel wire: Art.-No.	D	L	Art.-No. Set
Cylinder Brush	100	round	545.303	38	1.000	**599.921**	544.307	15	600	**599.931**
Cylinder Brush	100	round	545.331	100	1.000		544.361	25	800	
Boiler Brush	100	rectangular	552.811	30 x 70	1.000		559.831	31 x 20	600	
Boiler Brush	100	rectangular	552.816	50 x 100	1.000		551.811	30 x 20	500	
Boiler Brush	100	rectangular	559.713	75 x 30	1.000		551.812	50 x 40	700	

EAN **2 Brush Set, Steel Wire, external Thread W 1/2, crimped, 9 pieces**

Content: 1 piece each		D mm | *inch*	L mm | *inch*	A mm | *inch*	Format	Art.-No. Set
506.330	Interior Brushes	30 | *1 1/4*	160 | *6 1/4*	100 | *4*	round	**599.962**
506.340	Interior Brushes	40 | *1 3/8*	160 | *6 1/4*	100 | *4*	round	
506.363	Interior Brushes	63 | *2 1/2*	160 | *6 1/4*	100 | *4*	round	
532.718	Boiler Brush	30 x 50 | *1 1/4 / 2*	160 | *6 1/4*	100 | *4*	rectangular	
532.716	Boiler Brush	30 x 90 | *1 1/4 / 3 1/2*	160 | *6 1/4*	100 | *4*	rectangular	
532.703	Boiler Brush	50 x 100 | *2 / 4*	160 | *6 1/4*	100 | *4*	rectangular	
529.311	Back board brush	80 x 150 | *3 / 6*	150 | *6*			
567.671	Handle with Eye		500 | *20*			
567.771	Extension		500 | *20*			

EAN **Brush Set, Polyamide Bristles, external Thread W 1/2, crimped, 9 pieces**

Content: 1 piece each		D mm | *inch*	L mm | *inch*	A mm | *inch*	Format	Art.-No. Set
506.838	Interior Brushes	38 | *1 1/2*	160 | *6 1/4*	100 | *4*	round	**599.991**
506.855	Interior Brushes	55 | *2 1/4*	160 | *6 1/4*	100 | *4*	round	
506.860	Interior Brushes	60 | *2 3/8*	160 | *6 1/4*	100 | *4*	round	
533.008.24	Boiler Brush	30 x 50 | *1 1/4 / 2*	160 | *6 1/4*	100 | *4*	rectangular	
533.009.24	Boiler Brush	30 x 90 | *1 1/4 / 3 1/2*	160 | *6 1/4*	100 | *4*	rectangular	
533.010.24	Boiler Brush	50 x 100 | *2 / 4*	160 | *6 1/4*	100 | *4*	rectangular	
529.811	Back board brush	80 x 150 | *3 / 6*	150 | *6*			
567.671	Handle with Eye		500 | *20*			
567.771	Extension		500 | *20*			

Stove Pipe Brushes

Stove Pipe Brushes with Twisted Handle IBZ

	Filling	D mm | *inch*	L mm | *inch*	A mm | *inch*	Pack.	Art.-No.
1	**STM**	130 | *5 1/8*	2,000 | *78 3/4*	200 | *8*	10	**546.302**
	STM	130 | *5 1/8*	3,000 | *118*	200 | *8*	10	**546.304**
	STM	150 | *6*	2,000 | *78 3/4*	200 | *8*	10	**546.306**
	STM	180 | *7*	2,000 | *78 3/4*	200 | *8*	10	**546.314**
	STM	200 | *8*	2,000 | *78 3/4*	200 | *8*	10	**546.318**
2	**BAS**	150 | *6*	2,000 | *78 3/4*	200 | *8*	10	**546.906**
	BAS	150 | *6*	3,000 | *118*	200 | *8*	10	**546.908**

Delivery only in noted packaging unit. If you need smaller quantities, please order stove pipe brushes with separate handle.

3 Stove Pipe Brushes with separate Handle IBZG

Filling	D mm | *inch*	L mm | *inch*	A mm | *inch*	Thread	Pack.	Art.-No.
STM	80 | *3*	275 | *10 7/8*	200 | *8*	M 10	5	**507.307**
STM	100 | *4*	275 | *10 7/8*	200 | *8*	M 10	5	**507.308**
STM	130 | *5 1/8*	275 | *10 7/8*	200 | *8*	M 10	5	**507.301**
STM	150 | *6*	275 | *10 7/8*	200 | *8*	M 10	5	**507.302**
STM	160 | *6 3/8*	275 | *10 7/8*	200 | *8*	M 10	5	**507.303**
STM	180 | *7*	275 | *10 7/8*	200 | *8*	M 10	5	**507.304**
STM	200 | *8*	275 | *10 7/8*	200 | *8*	M 10	5	**507.305**
BAS	150 | *6*	275 | *10 7/8*	200 | *8*	M 10	5	**507.959**

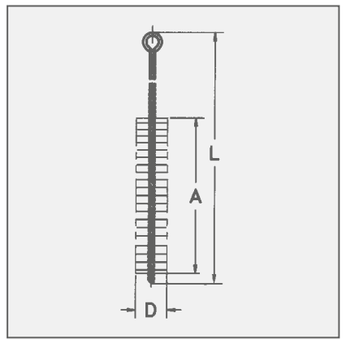

Item Nos. in bold are available ex stock.
Consider our minimum order value for *italic printed* article numbers (see page 139).k

STM = brass coated steel
BAS = bassine black

Accessories

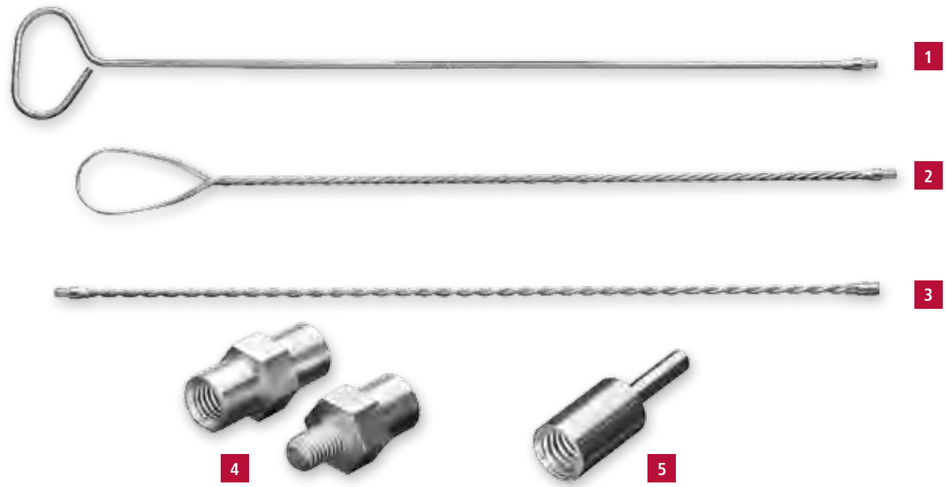

Handle with Eye

	L mm | *inch*	Thread	Format	Pack.	Art.-No.
1	400 | *16*	External M 10	round steel, straight	1	**568.805**
	800 | *31 1/2*	External M 10	round steel, straight	1	*568.802*
	1,000 | *40*	External M 10	round steel, straight	1	**568.806**
2	EAN 1,000 | *40*	Internal M 4	twisted wire	1	*566.603*
	EAN 1,000 | *40*	Internal M 6	twisted wire	1	**566.601**
	EAN 1,000 | *40*	Internal M 10	twisted wire	1	**566.602**
	EAN 1,000 | *40*	External M 12	twisted wire	1	**567.201**
	EAN 1,000 | *40*	Internal W 3/8	twisted wire	1	*567.603*
	500 | *20*	Internal W 1/2	twisted wire	1	**567.671**
	EAN 1,000 | *40*	Internal W 1/2	twisted wire	1	**567.601**

3 Extension

	L mm | *inch*	Thread	Format	Pack.	Art.-No.
	EAN 1,000 | *40*	Internal / External M 4	twisted wire	1	**566.703**
	EAN 1,000 | *40*	Internal / External M 6	twisted wire	1	**566.701**
	EAN 1,000 | *40*	Internal / External M 10	twisted wire	1	**566.702**
	EAN 1,000 | *40*	Internal / External M 12	twisted wire	1	**567.731**
	EAN 1,000 | *40*	Internal / External W 3/8	twisted wire	1	*567.703*
	500 | *20*	Internal / External W 1/2	twisted wire	10	**567.771**
	EAN 1,000 | *40*	Internal / External W 1/2	twisted wire	1	**567.701**

EAN Adapter Threads

			L mm | *inch*	Pack.	Art.-No.
4	Internal W 1/2	Internal M 12	40 | *1 3/8*	1	**001.211**
	Internal W 1/2	Internal M 10	40 | *1 3/8*	1	**001.212**
	Internal W 3/8	Internal M 10	40 | *1 3/8*	1	*001.215*
	External M 10	Internal W 1/2	40 | *1 3/8*	1	**001.222**
	External M 10	Internal W 3/8	40 | *1 3/8*	1	**001.225**
5	Internal W 1/2	Shank Ø 6 mm	50 | *2*	1	**000.071**
	Internal M 6	Shank Ø 6 mm	50 | *2*	1	*000.072*

Fitting Brushes

1 2 3

EAN

1 Interior Fitting Brushes IBM

D mm | *inch*	L	A	Filling Material	Pack.	Art.-No.
8 | *5/16*	185	12	**ROF** 0.10 | *0.004"*	10	**562.508**
10 | *3/8*	185	12	**ROF** 0.10 | *0.004"*	10	**562.510**
12 | *1/2*	185	15	**ROF** 0.10 | *0.004"*	10	**562.512**
15 | *5/8*	185	20	**ROF** 0.15 | *0.006"*	10	**562.515**

D mm | *inch*	L	A	Filling Material	Pack.	Art.-No.
18 | *5/8*	185	20	**ROF** 0.15 | *0.006"*	10	**562.518**
22 | *7/8*	185	25	**ROF** 0.20 | *0.008"*	10	**562.522**
28 | *1*	185	25	**ROF** 0.20 | *0.008"*	10	**562.528**
35 | *1 1/2*	185	25	**ROF** 0.20 | *0.008"*	10	**562.535**

2 Exterior Fitting Brushes, Steel Wire

D mm | *inch*	d	Marking	Pack.	Art.-No.
39 | *1 3/8*	10	1/4"	6	**037.921**
39 | *1 3/8*	12	3/8"	6	**037.922**
42 | *1 5/8*	15	1/2"	6	**037.923**

D mm | *inch*	d	Marking	Pack.	Art.-No.
48 | *1 7/8*	18	5/8"	6	**037.924**
48 | *1 7/8*	22	3/4"	6	**037.925**
55 | *2 1/4*	28	1"	6	**037.927**

3 Fitting Brush Set, 8 Pieces

	Art.-No.
4 interior and exterior brushes each dia 1/2 / 5/8 / 3/4 /7/8 in a plastic bag	*599.908*

Fitting Brushes
Now with new designed two-components handle
For the inner cleaning in tubes in gas, water and climatic conditions. We use only stainless steel wire as the filling material for these brushes. This prevents long-term damage by material deposit in tubes. Fitting brushes for exterior cleaning contain a card from steel wire.

Fitting Brush Set
A case of artificial leather that contains the most frequently needed interior and exterior brushes.

Recommendation for users: When using interior fitting brushes, please only use brushes with stainless steel wire. This will avoid pitting by the use of rusting wire parts.

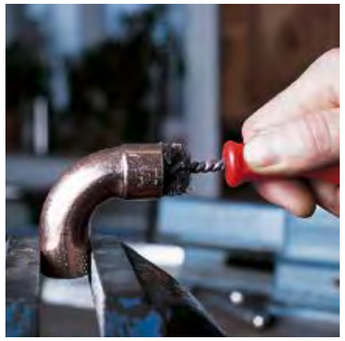

Brushes and Scratcher

1 2 3 4

1 Battery Terminal Brushes

Filling Material	D mm | *inch*	L mm | *inch*	A mm | *inch*	Pack.	Art.-No.
STA	17/24 | *5/8 / 1*	120/180 | *4 3/4 / 7*	60 | *2 3/8*	12	**563.301***

2 Soluble Oil Brushes

Filling Material	Ø Bundle mm | *inch*	L mm | *inch*	H mm | *inch*	Pack.	Art.-No.
mixed hair	7 | *1/4*	150 | *6*	40 | *1 3/8*	100	**570.907**
mixed hair	10 | *3/8*	240 | *9 1/2*	55 | *2 1/4*	100	**570.910**

3 Soldering Fluid Brushes

Filling Material	D mm | *inch*	L mm | *inch*	H mm | *inch*	Pack.	Art.-No.
bristles	10 | *3/8*	123 | *4 7/8*	20 | *3/4*	100	**045.910**
bristles	15 | *5/8*	140 | *5 1/2*	25 | *1*	100	**045.915**
STA	20 | *3/4*	205 |	30 | *1 1/4*	200	**045.301**

4 Rust Scratcher

Filling Material	D mm | *inch*	L mm | *inch*	H mm | *inch*	Pack.	Art.-No.
STA straight 0.23	5/8 | *1/4 / 5/16*	100 | *4*	6 | *1/4*	180	**184.101**
STA Straight 0.23 | *0.009"* + **PP** 0.15 | *0.006"*	5/8 | *1/4 / 5/16*	100 | *4*	6/15 | *1/4 / 5/8*	180	*184.104*

* conical filling

Battery Terminal Brushes
For cleaning of battery terminals. The twisted brush is conical filled for cleaning connection terminals of the battery cable. To clean the battery terminals use the ringshaped filed cards stuck in the handle.

Soluble Oil Brushes
With twisted wire handle for workshop use.

Soldering Fluid Brushes
The handle is made of tinned metal.

Item Nos. in bold are available ex stock.
Consider our minimum order value for *italic printed* article numbers (see page 139).

STA = steel wire
ROF = stainless steel wire
PP = polyprophylene

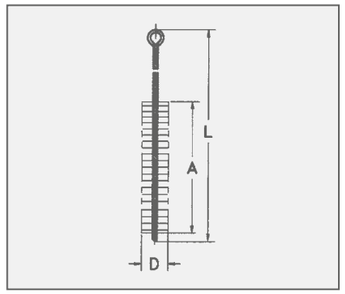

LESSMANN®
THE GERMAN BRUSH COMPANY

D.I.Y. BRUSHES AND SALES PROMOTION

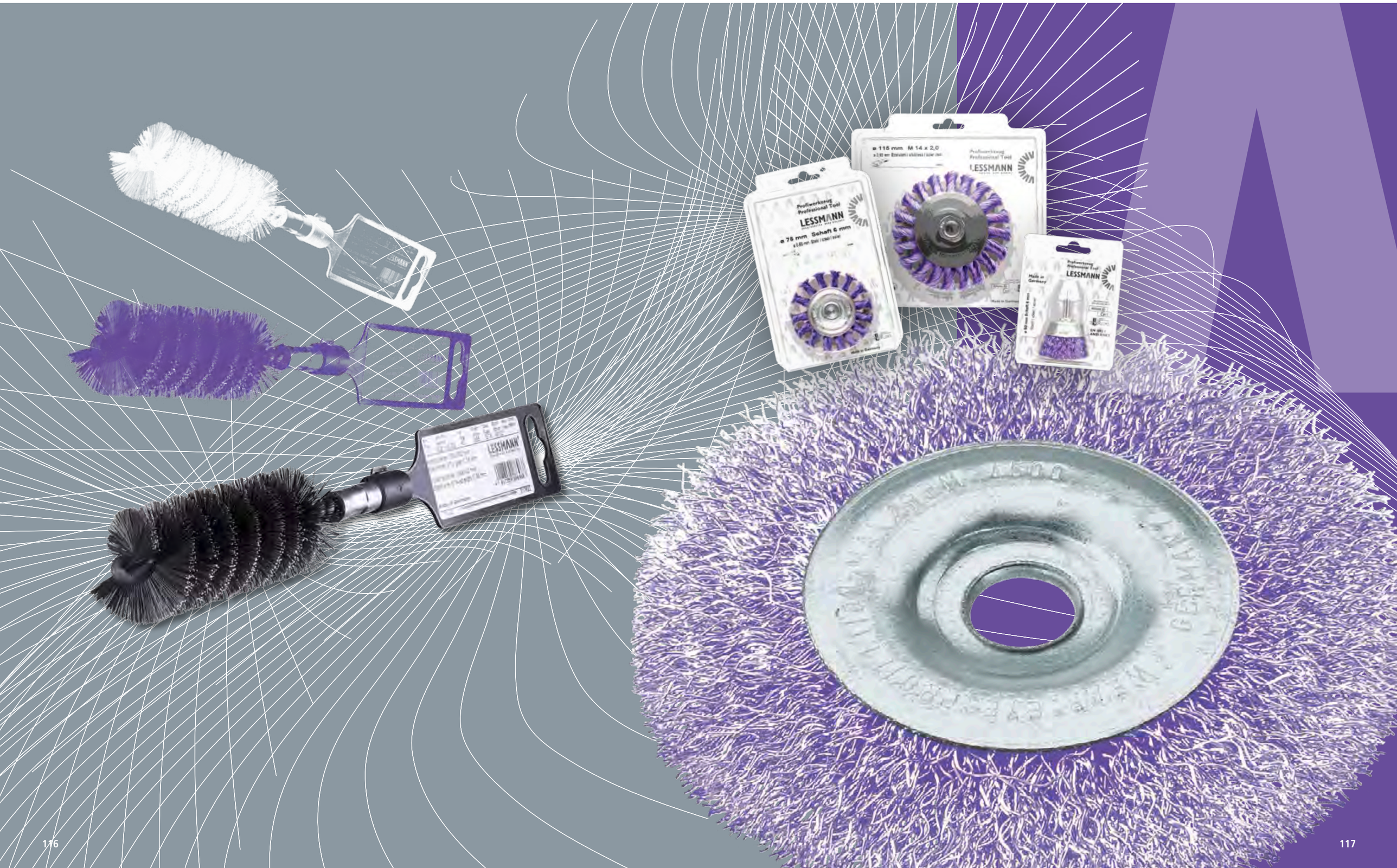

Do It Yourself Brushes

D.I.Y Brushes with Shank
Do It Yourself brushes are an excellent alternative to the professional tools previously shown in this catalogue. Available are cup brushes from diameter 50 - 75 mm, wheel brushes diameter 50 - 100 mm, end brushes and cylinder brushes.

Stainless Steel Brushes
Information on working on stainless steel you find at www.lessmann.com

Attractive assortment
Coarse and fine steel wire, brass wire and abrasive filaments are available as filling materials.

The brushes are packed in small display cartons, 10 pieces per carton.

We offer different packaging to present these and other common brushes with shanks in specialist shops.

Item Nos. in bold are available ex stock.
Consider our minimum order value for *italic printed* article numbers (see page 139).

STA	= steel wire
ROF	= stainless steel wire
MES	= brass wire
SIC	= brass wire

5 End Brushes with Shank 6 mm Ø

D mm | *inch*	RPM max.	Pack.	STA 0.30 | *0.012"* Art.-No.	SIC 80/1.2 Art.-No.
25 | *1*	12,000	10	**455.161**	**453.821**

6 Cylinder Brushes with Shank 6 mm Ø

D mm | *inch*	RPM max.	Pack.	STA 0.30 | *0.012"* Art.-No.
28 | *1*	1,500	10	**541.301**

7 D.I.Y. Wheel Brushes with bore

D mm | *inch*	A mm | *inch*	d	RPM max.	Pack.	STA 0.35 | *0.014"* Art.-No.
75 | *3*	10 | *3/8*	1/2"	4,500	10	**300.102**
100 | *4*	10 | *3/8*	1/2"	4,500	10	**320.102**

Wheel Brushes with Shank 6 mm Ø

D mm | *inch*	A mm | *inch*	RPM max.	Pack.	1: STA 0.20 | *0.008"* 0.25 | *0.010"*	STA 0.30 | *0.012"* 0.35 | *0.014"*	ROF 0.20 | *0.008"* Art.-No.	ROF 0.30 | *0.012"* Art.-No.
50 | *2*	8-10 | *3/8*	4,500	10	**410.122**	**410.123**		
75 | *3*	8-10 | *3/8*	4,500	10	**410.132**	**410.133**	**410.134**	**410.135**
75 | *3*	14-16 | *5/8*	4,500	10		**410.173**		
100 | *4*	8-10 | *3/8*	4,500	10	**410.152**	**410.153**	**410.154**	**410.155**
100 | *4*	14-16 | *5/8*	4,500	10		**410.183**		**410.185**

D mm | *inch*	A mm | *inch*	RPM max.	Pack.	2: MES 0.25 | *0.010"* Art.-No.	SIC 80/1.2 Art.-No.	SIC 180/0.9 Art.-No.
75 | *3*	8-10 | *3/8*	4,500	10	**410.136**	**410.138**	*410.139*
100 | *4*	8-10 | *3/8*	4,500	10		**410.158**	*410.159*

3 Cup Brushes with Shank 6 mm Ø

D mm | *inch*	RPM max.	Pack.	STA 0.25 | *0.010"* Art.-No.	STA 0.35 | *0.014"* Art.-No.	ROF 0.20 | *0.008"* Art.-No.	ROF 0.30 | *0.012"* Art.-No.
50 | *2*	4,500	10	**430.122**	**430.123**	**430.124**	**430.125**
75 | *3*	4,500	10	**430.132**	**430.133**	**430.134**	**430.135**

D mm | *inch*	RPM max.	Pack.	4: MES 0.25 | *0.010"* Art.-No.	SIC 80/1.2 Art.-No.	SIC 320/0.6 Art.-No.
50 | *2*	4,500	10	**430.126**	**430.128**	**430.129**
75 | *3*	4,500	10	**430.136**	**430.138**	**430.139**

Packing and Sales Promotion

Low-cost product presentation – Brushes on card

Technical data on front, details and EAN on back: Blister Packing

The most demanded tool brushes are not only offered single or bulk packed. These fast sellers are presented even better in sale promoting display cartons. They can be put on tool shelves or on the counter.

The standard assortment contains:
- Knot cup brushes diameter 65
- Knot wheel brushes diameter 115
- Knot bevel brushes diameter 100
- Cup brushes with crimped wire diameter 60

A display carton with the best selling Do It Yourself Brushes, bulk packed, completes the offer (see pages 124 - 125).

Brushes with blister packing
All standard brushes for drilling machines and angle grinders are available with blister packing. The blister packing is available with attractive labels with information about technical data and EAN-bar code. The clam shells emphasize the brushes' value, protect them and provide good visible presentation.

On request we can arrange your individual private label solution.

Presentation for tube brushes
With this practical hanger assembly from now on also tube brushes with thread can be presented on self-service walls in the retail market.
The hangers are available in M 6, M 10, W 3/8" and W 1/2". All hangers are with a eurohole.
A label can be fixed at the front of the hanger.

Cut Cases for presenting the products
Cut Cases are a simple alternative for presenting brushes in large quantities. The Products can be inserted in the self-service wall modularly.

EAN **Displaybox with Toolbrushes**

Pack	Catalogue Page	Filling	D mm | *inch*	d mm | *inch*	RPM max.	Pack.	Art.-No.
Knot Cup Brushes	51	**STH** 0.50 | *0.020"*	65 | *2 1/2*	M 14 x 2.0	12.500	20	**482.217.07**
Knot Wheel Brushes	17	**STH** 0.50 | *0.020"*	115 | *4 1/2*	22.2 | *7/8*	12.500	18	**472.211.07**
Knot Bevel Brushes	57	**STH** 0.50 | *0.020"*	100 | *4*	M 14 x 2.0	12.500	12	**471.257.07**
Crimped Cup Brushes	54	**STA** 0.30 | *0.012"*	60 | *2 3/8*	M 14 x 2.0	12.500	20	**421.167.07**

D.I.Y. Brush Assortments; Shank Brushes, Description Page 119

Contents: 36 pieces assorted						Art.-No.
6 Wheel Brushes	410.132	6 Wheel Brushes	410.153	6 Cup Brushes	430.123	**499.907**
6 Cup Brushes	430.133	6 End Brushes	455.161	6 Cylinder Brushes	541.301	
9 Wheel Brushes	410.132	9 Cup Brushes	430.123			**499.921**
9 Wheel Brushes	410.153	9 Cup Brushes	430.133			

EAN **Brushes with Shank 6 mm Ø on Card** Description and technical data please see table above and on page 63, 118, 119

	D mm | *inch*	Pack.	**STA 0.30** | *0.012"* **0.35** | *0.014"*	**MES 0.25** | *0.010"* Art.-No.	**SIC 80** Art.-No.	**STH knotted 0.50** | *0.020"*
Wheel Brushes	50 | *2*	10	**410.123.07**			
	75 | *3*	10	**410.133.07**	**410.136.07**	**410.138.07**	**417.198.07**
	100 | *4*	10	**410.153.07**		**410.158.07**	
Cup Brushes	50 | *2*	10	**430.123.07**	**430.126.07**	**430.128.07**	
	75 | *3*	10	**430.133.07**		**430.138.07**	
End Brushes	25 | *1*	10	**455.161.07**		*453.821.07*	
Cylinder Brushes	28 | *1*	10	**541.301.07**			

Item Nos. in bold are available ex stock.
Consider our minimum order value for *italic printed* article numbers (see page 139).

STA = steel wire
STH = steel wire, high tensile
MES = brass wire
SIC = brass wire

Packing and Sales Promotion

Brushes for Angle Grinders in Blister Packaging

	D	Thread	STH 0.35 | *0.014"*	STH 0.50 | *0.020"*	ROH 0.30 | *0.012"*	ROH 0.50 | *0.020"*	STA 0.35 | *0.014"*
	mm | *inch*	mm | *inch*	Art.-No.	Art.-No.	Art.-No.	Art.-No.	Art.-No.
Knot Cup Brushes	65 | *2 1/2*	M 14	*482.117.09*	*482.217.09*		*482.817.09*	
	65 | *2 1/2*	M 10		*482.214.09*			
Knot Wheel Brushes	115 | *4 1/2*	Bo. 22.2 | *7/8*		*472.211.09*		*472.811.09*	
	115 | *4 1/2*	M 14		*472.217.09*			
Knot Bevel Brushes	100 | *4*	M 14		*471.257.09*			
	115 | *4 1/2*	M 14		*472.257.09*		*472.857.09*	
Cup Brushes crimped	60 | *2 3/8*	M 14			*421.367.09*		*421.167.09*
	60 | *2 3/8*	M 10					*421.164.09*
	75 | *3*	M 14					*423.167.09*
Conical Brushes crimped	100 | *4*	M 14					*422.177.09*

Brushes for Grinders and Drilling Machines with Shank 6 mm Ø in Blister Packaging

	D	STH 0.35 | *0.014"*	STH 0.50 | *0.020"*	ROH 0.35 | *0.014"*
	mm | *inch*	Art.-No.	Art.-No.	Art.-No.
Knot End Brushes	19 | *3/4*	*453.278.09*		
	22 | *7/8*	*454.278.09*		*454.378.09*
Knot Wheel Brushes	75 | *3*		*417.198.09*	

D.I.Y. Brushes for Grinders and Drilling Machines with Shank 6 mm Ø in Blister Packaging

	D	STA 0.25 | *0.010"*	STA 0.30 | *0.012"*	ROF 0.30 | *0.012"*	MES 0.25 | *0.010"*	SIC 80/1.2
	mm | *inch*	Art.-No.	0.35 | *0.014"* Art.-No.	Art.-No.	Art.-No.	Art.-No.
Wheel Brushes	50 | *2*		*410.123.09*			
	75 | *3*		*410.133.09*	*410.135.09*	*410.136.09*	*410.138.09*
	100 | *4*	*410.152.09*	*410.153.09*			*410.158.09*
Cup Brushes	50 | *2*	*430.122.09*	*430.123.09*		*430.126.09*	*430.128.09*
	75 | *3*	*430.132.09*	*430.133.09*			*430.138.09*
End Brushes	25 | *1*		*455.161.09*			
Cylinder Brushes	28 | *1*		*541.301.09*			

Item Nos. in bold are available ex stock.
Consider our minimum order value for *italic printed* article numbers (see page 139).

STA	= steel wire
STH	= steel wire, high tensile
ROF	= stainless steel wire
ROH	= stainless steel wire, high tensile
MES	= brass wire
PP	= polypropylene
SIC	= brass wire

1 Hanger assembly for tube brushes, PP black, with euro hole

Interior Thread	Total length mm | *inch*	Width mm | *inch*	Height mm | *inch*	Pack.	Art.-No.
M 6	135 | *5*	42 | *1 5/8*	2 | *5/64*	10	**000.501**
M 10	135 | *5*	42 | *1 5/8*	2 | *5/64*	10	**000.503**
W 3/8"	135 | *5*	42 | *1 5/8*	2 | *5/64*	10	**000.506**
W 1/2"	135 | *5*	42 | *1 5/8*	2 | *5/64*	10	**000.507**

2 Brushes with thread, on hanger assembly

	Diameter Brush	Total length Brush	Total length Brush	Thread Brush	Pack.	STA
	mm | *inch*	mm | *inch*	mm | *inch*			Art.-No.
Tube Brushes	20 | *3/4*	150 | *6*	100 | *4*	1/2"	10	*502.120.03*
	30 | *1 1/4*	160 | *6 1/4*	100 | *4*	1/2"	10	*506.130.03*
	35 | *1 1/2*	160 | *6 1/4*	100 | *4*	1/2"	10	*506.135.03*
	40 | *1 3/8*	160 | *6 1/4*	100 | *4*	1/2"	10	*506.140.03*
	50 | *2*	160 | *6 1/4*	100 | *4*	1/2"	10	*506.150.03*
	63 | *2 1/2*	160 | *6 1/4*	100 | *4*	1/2"	10	*506.163.03*
	75 | *3*	160 | *6 1/4*	100 | *4*	1/2"	10	*506.175.03*
	101 | *4*	160 | *6 1/4*	100 | *4*	1/2"	10	*506.101.03*
Boiler Brushes	40 x 80 | *1 3/8 / 3*	160 | *6 1/4*	100 | *4*	1/2"	10	*532.202.03*
	50 x 100 | *2 / 4*	160 | *6 1/4*	100 | *4*	1/2"	10	*532.203.03*

3 Brushes in Cut Cases

	Pack.	Art.-No.
Hand brushes STA straight 0.35, 4 Rows	10	*100.041.CC*
Hand brushes ROF crimped 0.35, 4 Rows	10	*104.641.CC*
Hand brushes MES crimped 0.35, 4 Rows	10	*107.641.CC*
Spark Plug Brushes MES crimped 0.15, 3 Rows	25	*125.211.CC*
Cup Brushes STA crimped 0.35, Drm. 60, Gew. M 14	15	*421.167.CC*
Knot Conical Brushes STH straight 0.50, Drm. 100, Gew. M 14	5	*471.257.CC*
Knot Wheel Brushes STH straight 0.50, Drm. 115, Bo. 22,2	6	*472.211.CC*
Knot Cup Brushes STH straight 0.50, Drm. 65, Gew. M 14	12	*482.217.CC*
Knot Cup Brushes STH straight 0.50, Drm. 90, Gew. M 14	8	*485.237.CC*

Sales Promotion

Professionalism, service, quality...
The LESSMANN Display units will make a good impression on your customers. They are not only good for your image but will also have a positive effect on promoting and increasing your brush sales. The comprehensive and at the same time clear presentation makes the customers choice much easier.

Take advantage of our experience and use this possibility that will lead to successful increased sales. Beside your special demands the most important thing to know is the branch where your most important customers come from and what their demands are. We have tried and tested variations of assortments for different kind of constellation. Please do not hesitate to contact us and we will arrange your individual programme. Because the production of high quality brushes is as important as having success with our products!

1 | Self-service Wall 100 x 220 cm
The most effective sales promotion for your LESSMANN brush assortment. Available with LESSMANN logo or Brush-Know-how label.

2 | Individual mix for Success
Products that fit in with the wishes of your (most important) customers and their main demand, arranged together with you and your customers. Your assortment can mainly consist of technical brushes or hand brushes.

3 | Carton Packing
All brushes for angle grinders in sales promoting single packing – stable and safe.

4 | Little helps for orientation (labels)
They give hints regarding brushes and their application. Available for following article groups: Hand brushes, brushes for drilling machines and brushes for angle grinders.

5 | Hand Brushes with EAN Code
All standard hand brushes (article no. 10x.xxx) with EAN code. Without extra charges for you!

6 | Brush-Know-how Poster
All important brush applications at first glance! Available as label 100 x 40 cm and as poster 40 x 60 cm. Ask us or our representatives!

7 | Brush-Know-how Flyer
The most important brush applications of our brush assortment in length DIN with technical information and hints!

8 | Display boxes for Shank Brushes
Available as a standard for all shank wheel brushes, cup brushes and end brushes with shank.

9 | We will help you with the right choice of shelf
On request we can arrange the right shelf solution for presenting your brushes!

10 | Hanger Assembly for tube brushes
With this hanger with euro hole, brushes with thread can be presented.

11 | Small self-service wall
A suitable alternative solution: A practical self-service wall with the measurements 67 x 180 cm.

12 | Cut Cases
Cut Cases for an easy solution of presenting products in large quantities.

Private Label
A good idea with different solution possibilities. Ask for your own brand!

Sales promoting blister packing
For all drilling machines and angle grinders.

Take a look at quality
All technical data and safety information as well as observation windows for recognising the brushes (e.g. green marking for stainless steel brushes).

Stainless Steel Marking
LESSMANN brushes with stainless steel wire can easily be recognised by green cups or side plates.

Cut Cases
Cut Cases for an easy solution of presenting products in large quantities.

Labels as help for orientation
They explain brushes and their applications. Available for 3 article groups:
- Hand brushes
- Brushes for drilling machines
- Angle grinders

Brush-Know-how flyer
The most important brush application of our brush assortment in length DIN with technical information and hints!

Order now:
German version: Art.-No. **99BKHDEU**
English version: Art.-No. **99BKHENG**

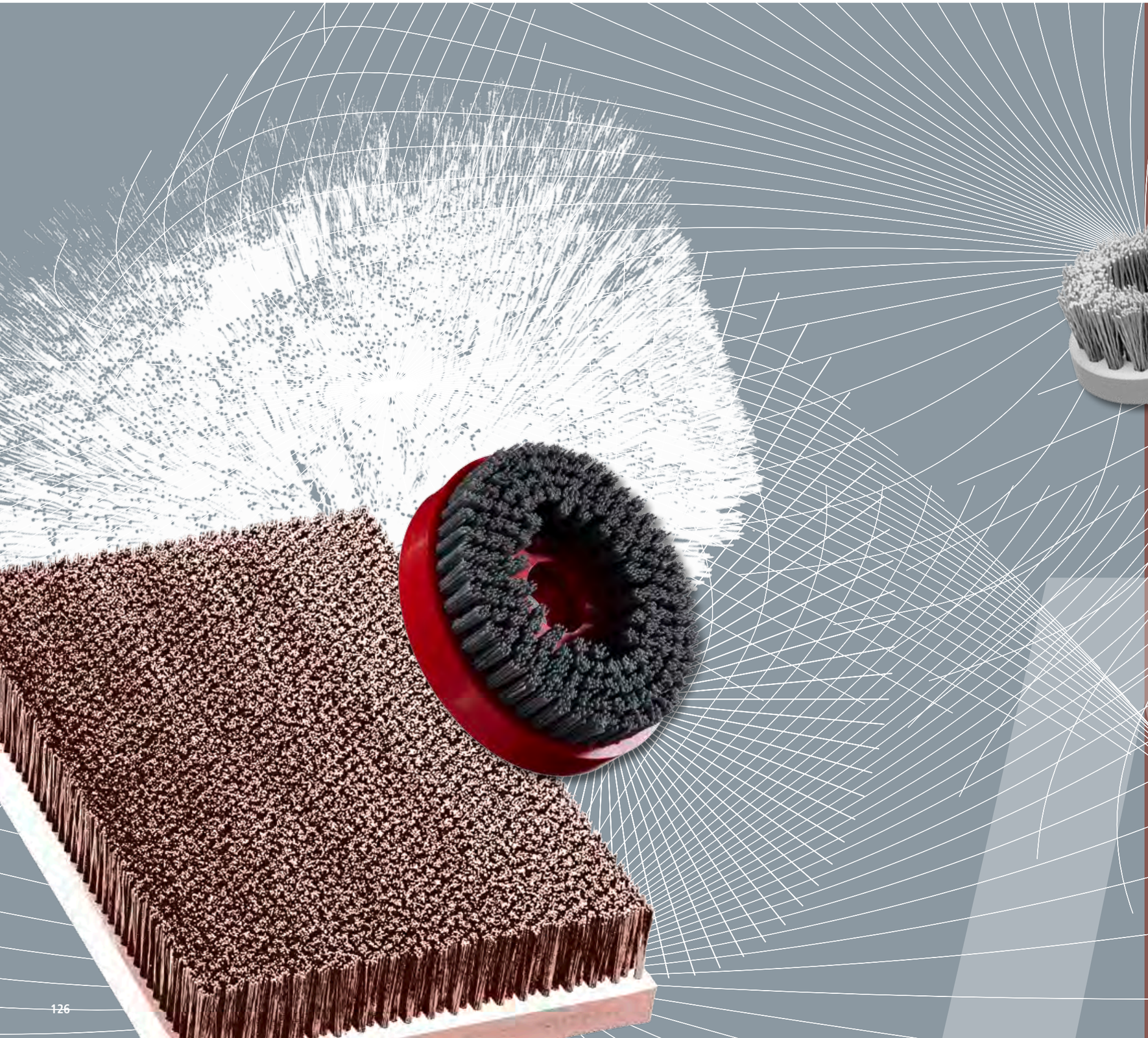

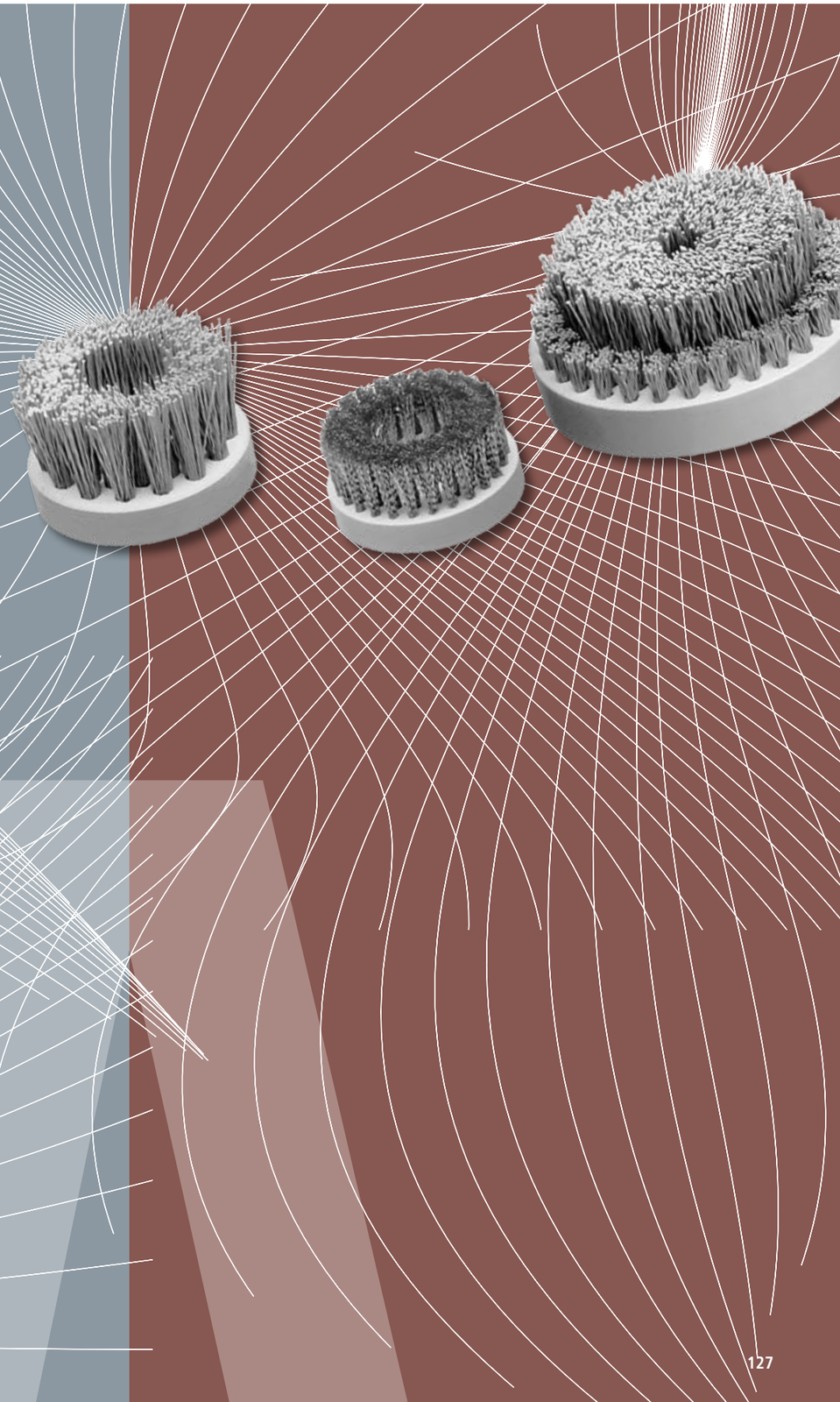

Staple Set Brushes

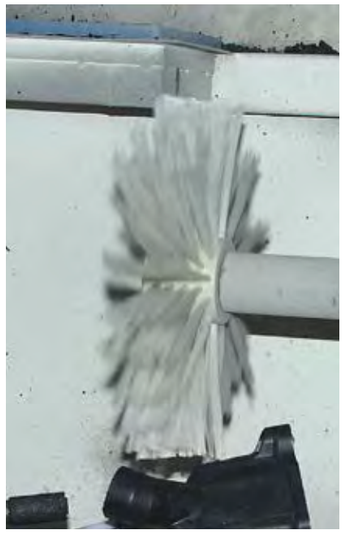

Staple Set Brushes
For applications with little mechanic load, brushes in a staple set edition are produced. Typical applications are for example cleaning, transporting, sorting or moistening.

Depending on the requirements, the filling material can be fixed individually into the body. The distance of the bundles are variable and comply with the application.
As filling material next to different wires also fibres are available. Also mixed filament in various mixing proportions are possible.

LESSMANN produces staple set wheel and roller brushes with bore or arbour absorption, depending on the customers' specification. Disc Brushes usually are delivered with thread or bore.

Please inform yourself on the following pages and do not hesitate to contact us for personal advice!

Disc Brushes

Disc Brushes			
DA - External Diameter	KD - Body Height	BH - Filling Length	Deviation of the Bristles
mm	mm	mm	
min. 10, max. 800	min. 10, max. 100	min. 8	max. 40°
		max. 95 Steel	
		max. 130 Plastic	

Body Material: PP, PE, PA, Wood, Steel, Aluminium
Filling Material: STA, STM, MES, ROF, PP, PE, PA, FIB, ROS, SIC, AO

Disc Brushes – for cleaning and deburring
Disc Brushes are used for the treatment of plane surfaces on almost every material. The numerous variations of body and trimming materials and adapter systems make them for all purposes applicable.
For deburring working pieces, disc brushes can be inserted in individual equipments as well as in machining centres for removing secondary burrs.

Disc Brushes for the wood machining industry
Disc brushes used for the wood machining industry have a very long filling material (SIC). Used on angle grinders, the disc brushes are ideal for maintaining, cleaning, structuring or polishing wood.
The brushes are very effective when working on large surfaces.

Circular Discs – Standard Body
If your application allows the mentioned sizes, we recommend our standard bodies for short delivery time and low costs.

The inquiry form for disc brushes you find on page 131 or at www.lessmann.com

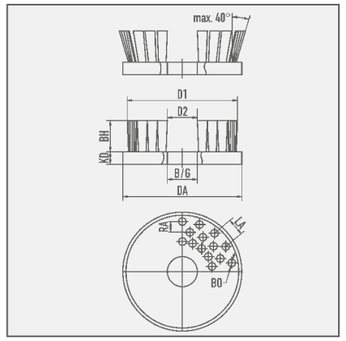

Item Nos. in bold are available ex stock.
Consider our minimum order value for *italic printed* article numbers (see page 139).

STA	= steel wire
STM	= brass coated steel
ROF	= stainless steel wire
MES	= brass wire
PP	= polypropylene
PA	= polyamide
PE	= polyethylene
FIB	= fibre
ROS	= horse hair
SIC	= silicon carbide bristles
AO	= aluminium oxide bristles

Disc Brushes

Disc Brushes

Filling	D mm | *inch*	KD mm | *inch*	Filling length mm | *inch*	Bore/ Thread mm | *inch*	RPM max.	1 Mixed filament STA / PA Art.-No.
STA 0.20 | *0.008"*	150 | *6*	25 | *1*	25 | *1*	M 14	2,000	**405.006**
SIC 180/1.0	125 | *5*	25 | *1*	20 | *3/4*	22.2 | *7/8*	3,000	*405.854*
SIC 180/1.0	150 | *6*	25 | *1*	20 | *3/4*	25 | *1*	2,000	*405.835*
SIC 120/1.1	150 | *6*	25 | *1*	25 | *1*	25 | *1*	2,000	*405.864*
Mixed filament STA 0.30 / **PA** 0.35	130 | *5 1/8*	25 | *1*	40 | *1 3/8*	M 14	2,500	*405.908*
Mixed filament STA 0.30 / **PA** 0.35	200 | *8*	25 | *1*	40 | *1 3/8*	M 14	1,500	*405.905*

2 Disc Brushes for the wood machining

Filling	D mm | *inch*	KD mm | *inch*	Filling length	Thread	RPM max.	Pack.	Art.-No.
SIC 46/1.6	130 | *5 1/8*	20 | *3/4*	50 | *2*	M 14	2,500	1	*405.843*
SIC 60/1.5	130 | *5 1/8*	20 | *3/4*	50 | *2*	M 14	2,500	1	*405.844*
SIC 80/1.2	130 | *5 1/8*	20 | *3/4*	50 | *2*	M 14	2,500	1	**405.845**

Circular Discs – Standard Body

DA mm | *inch*	KD mm | *inch*	Bore B / Thread G	Body Material
150 | *6*	25 | *1*	Bore 12	**PP** red
150 | *6*	25 | *1*	Bore 35 x 10.5 / 25, mounting hole 11	**PP** red
180 | *7*	18 | *5/8*	Thread M 12	**PP** red
180 | *7*	18 | *5/8*	Thread M 12 left	**PP** red
200 | *8*	25 | *1*	Bore 12	**PP** red
200 | *8*	25 | *1*	Bore 35 x 10.5 / 25, mounting hole 11	**PP** red
220 | *8 5/8*	20 | *3/4*	Bore 40	**PP** red

The standard bodies can be adapted on demand (dress to size, drill) for receiving other measurements.

Enquiry for Circular Discs

Drawing / description of application

Please mention measurements according to drawing

DA external diameter_____ mm
B/G bore/thread _____ mm
KD body height _____ mm
BH trim height_____ mm
D1 dia trim outside _____ mm
D2 dia trim inside _____ mm
RA row distance _____ mm
LA hole distance _____ mm
BO bundle bore _____ mm

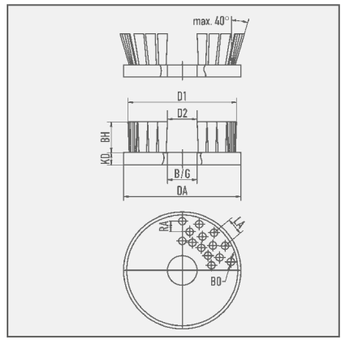

Brush Application
- ☐ deburring
- ☐ cleaning
- ☐ roughening / structuring
- ☐ others

Material
- ☐ steel
- ☐ aluminium
- ☐ wood
- ☐ stainless steel
- ☐ plastic
- ☐ others

Filling material
- ☐ steel
- ☐ brass coated steel
- ☐ brass
- ☐ stainless steel
- ☐ PP
- ☐ PA
- ☐ PE
- ☐ abrasive filament (SIC)
- ☐ abrasive filament (AO)
- ☐ fibre
- ☐ horsehair

Diameter of filling material:_____

Body
- ☐ PP
- ☐ PE
- ☐ PA
- ☐ wood
- ☐ steel
- ☐ aluminium

Piece number:_____

sender: company, contact person

More information required?
+49 9082 707-0
e-mail: info@lessmann.com

Other requirement forms you find at www.lessmann.com

Please fax this form to: +49 9082 707-78

INDUSTRIAL BRUSHES

Lath Brushes

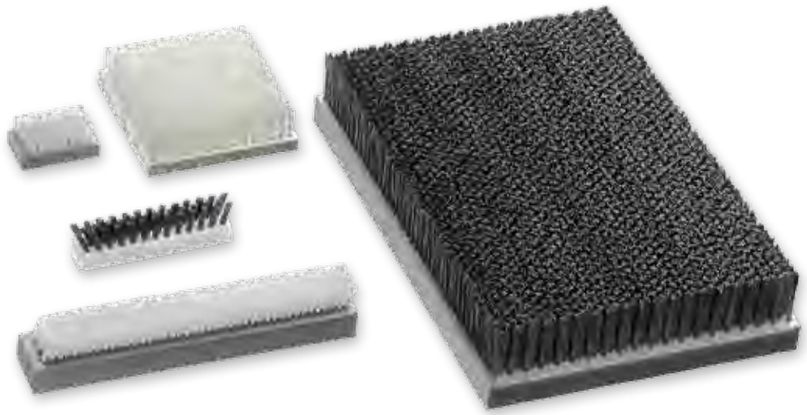

Lath Brushes				
Body Width	Total Length	KD - Body Size	BH - Trim Length	Deviation of the Bristles
mm	mm	mm	mm	
min. 8, max. 750	max. 2.400	min. 10, max. 100	min. 8	max. 30°
			max. 95 Steel	
			max. 130 Plastic	

Body Material: PP, PE, PA, Wood, Steel, Aluminium
Filling Material: STA, STM, MES, ROF, PP, PE, PA, FIB, ROS, SIC, AO

Lath Brushes
They work in machines and are used for clearing, cleaning, insulating and discharging electric charges etc. Various body materials are possible: including wood, metal and plastic. The filling material can be manifold and goes from fine horsehair to firm steel wire. Through the deviation of the bristles until 30° the lath bushes are very flexible in their applications.

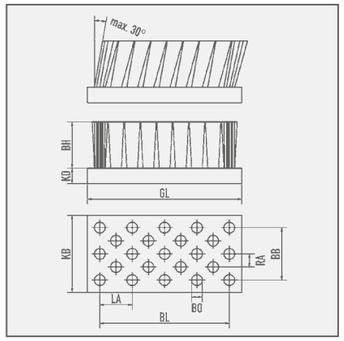

Item Nos. in bold are available ex stock.
Consider our minimum order value for *italic printed* article numbers (see page 139).

STA	= steel wire
STM	= brass coated steel
ROF	= stainless steel wire
MES	= brass wire
PP	= polypropylene
PA	= polyamide
PE	= polyethylene
FIB	= fibre
ROS	= horse hair
SIC	= silicon carbide bristles
AO	= aluminium oxide bristles

Enquiry for Lath Brushes

Drawing / description of application

Brush Application
- ☐ deburring
- ☐ cleaning
- ☐ roughening / structuring
- ☐ others

Material
- ☐ steel
- ☐ aluminium
- ☐ wood
- ☐ stainless steel
- ☐ plastic
- ☐ others

Filling material
- ☐ steel
- ☐ brass coated steel
- ☐ brass
- ☐ stainless steel
- ☐ PP
- ☐ PA
- ☐ PE
- ☐ abrasive filament (SIC)
- ☐ abrasive filament (AO)
- ☐ fibre
- ☐ horsehair

Please mention measurements according to drawing

GL total length _____ mm
KB total width _____ mm
KD body size _____ mm
BH trim height _____ mm
BL trim length _____ mm
BB trim width _____ mm
RA row distance _____ mm
LA hole distance _____ mm
BO bundle bore _____ mm

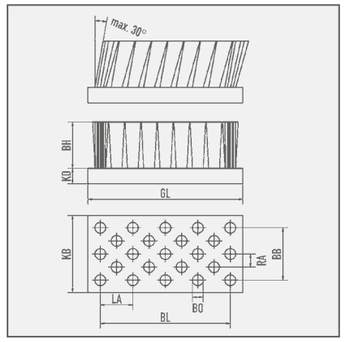

Diameter of filling material:_____

Body
- ☐ PP
- ☐ PE
- ☐ PA
- ☐ wood
- ☐ steel
- ☐ aluminium

Piece number:_____

sender: company, contact person

More information required?
+49 9082 707-0
e-mail: info@lessmann.com

Other requirement forms you find at www.lessmann.com

Please fax this form to: +49 9082 707-78

Wheel Brushes and Wide Face Brushes

Wheel Brushes and Wide Face Brushes				
KD - Body Diameter	D - Total Diameter	GL - Total Width	BL - Trim Length	B - Bore
mm	mm	mm	mm	
min. 25, max. 250	min. 45	min. 5, max. 800	min. 5, max. 780	min. 5, max. 200
	max. 440 Steel			
	max. 500 Plastic			

Body Material: PP, PE, PA, Wood, Steel, Aluminium
Filling Material: STA, STM, MES, ROF, PP, PE, PA, FIB, ROS, SIC, AO

Staple Set Wheel and Roller Brushes
For work without a mechanical load on the brushes.
The brush body is of wood, aluminium or plastic. The filling material is determined by the brushes purpose. Please also consider temperature, chemical and mechanical characteristics during use.
The density of the filling material can be varied by the diameter and the distance of and from the hole.

The mentioned data in the chart should support you defining the right brush for your application. For further information or support do not hesitate to contact us by e-mail, phone or fax. We will be very pleased to support you.

LESSMANN produces staple set wheel and roller brushes with bore or arbor absorption, depending on the customers' specification. Please contact us for personal advice!

Note:
For applications which have a high mechanical load on the brushes we advise our wheel and roller brushes with crimped or knotted wire.

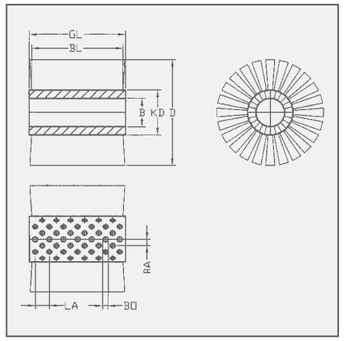

Item Nos. in bold are available ex stock.
Consider our minimum order value for *italic printed* article numbers (see page 139).

STA	= steel wire
STM	= brass coated steel
ROF	= stainless steel wire
MES	= brass wire
PP	= polypropylene
PA	= polyamide
PE	= polyethylene
FIB	= fibre
ROS	= horse hair
SIC	= silicon carbide bristles
AO	= aluminium oxide bristles

Enquiry for Wheel Brushes / Wide Face Brushes

Drawing / description of application

Brush Application
- ☐ deburring
- ☐ cleaning
- ☐ roughening / structuring
- ☐ others

Material
- ☐ steel
- ☐ aluminium
- ☐ wood
- ☐ stainless steel
- ☐ plastic
- ☐ others

Filling material
- ☐ steel
- ☐ brass coated steel
- ☐ brass
- ☐ stainless steel
- ☐ PP
- ☐ PA
- ☐ PE
- ☐ abrasive filament (SIC)
- ☐ abrasive filament (AO)
- ☐ fibre
- ☐ horsehair

Diameter of filling material:_____

Body
- ☐ PP
- ☐ PE
- ☐ PA
- ☐ wood
- ☐ steel
- ☐ aluminium

Piece number:_____

Please mention measurements according to drawing

GL	total length	_____	mm
BL	filling length	_____	mm
B	bore of axis	_____	mm
KD	diameter of body	_____	mm
D	total diameter	_____	mm
RA	distance of rows	_____	mm
LA	distance of holes	_____	mm
BO	bore of bundle	_____	mm

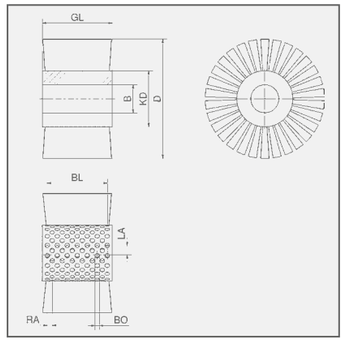

sender: company, contact person

More information required?
+49 9082 707-0
e-mail: info@lessmann.com

Other requirement forms you find at www.lessmann.com

Please fax this form to: +49 9082 707-78

Strip Brushes

Strip Brushes
Strip brushes are mainly used as cover in association with moving parts. They insulate doors and windows or help to keep moving parts on machines clean. There are many forms and profiles, with or without holders. Therefore, please indicate full measurements and holder details when ordering.
The profile can be made of steel, aluminium or plastic. The filling material can be bristles or steel wire (see pages 11 - 13).

Brushes for deburring machines
Special Strip Brushes as component part of deburring machines.

The inquiry form for strip brushes you find at www.lessmann.com

Required measurements and data:
GH total height
BH filling length
RB back width
shape of fixing

Filling Material:
STA, STM, MES, ROF, PP, PE, PA, FIB, ROS

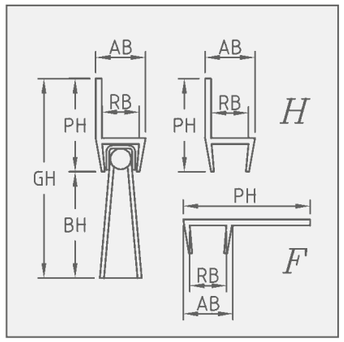

Item Nos. in bold are available ex stock.
Consider our minimum order value for *italic printed* article numbers (see page 139).

STA = steel wire
STM = brass coated steel
ROF = stainless steel wire
MES = brass wire
PP = polypropylene
PA = polyamide
PE = polyethylene
FIB = fibre
ROS = horse hair

Strip Brushes with H profile, aluminium

mounting	GH mm | *inch*	PH	BH mm | *inch*	AB	RB	Total length mm | *inch*	Pack.	**PA 0.30** | *0.012"* Art.-No.	**Steel Wire** Art.-No.	**Horsehair** Art.-No.
Steel plate narrow	50 | *2*	25	25 | *1*	8	5	1,000 | *40*	5	**052.881**	available on demand	*051.021*
Steel plate wide	90 | *3 1/2*	40	50 | *2*	12	8	1,000 | *40*	5	**052.891**	available on demand	available on demand
Stainless steel plate narrow	50 | *2*	25	25 | *1*	8	5	1,000 | *40*		available on demand	available on demand	available on demand
Stainless steel plate wide	90 | *3 1/2*	40	50 | *2*	12	8	1,000 | *40*		available on demand	available on demand	available on demand

Strip Brushes for deburring machines

mounting	GH mm | *inch*	BH mm | *inch*	Total length mm | *inch*	**PA 0.35** | *0.014"* Art.-No.
Steel plate zinc coated	40 | *1 3/8*	35 | *1 1/2*	500 | *20*	*052.860*
Steel plate zinc coated	40 | *1 3/8*	35 | *1 1/2*	600 | *23 5/8*	*052.868*

Other dimensions on inquiry.
You find an inquiry form for strip brushes on www.lessmann.com

Article Numbers

from No.	to No.	Page
000311	000323	87
001211	001225	113
037101	037221	87
037921	037927	114
045910	045915	115
048081	048941	47
052860	052868	137
056001	056701	81
061101	061111	87
064050		87
100041CC	485237CC	123
100011	109851	79
120401	120831	81
121111	121211	86
122401	122801	81
124101	124801	93
125111	125521	82
126311	132701	83
132801		82
136101	136108	81
137701	138705	83
140201	141421	85
142101	142211	87
144001	144801	86
146101	148601	89
151108	152510	91
15199107	15299507	91
152811		85
182001	182331	82
182401	182451	80
183704		83
184101	184104	115
185121	185651	80
186431		80
300102		118
30120015	30129930	35
310141	310871	25-27
31070206		35
312142	312562	29-31
320102		118
320141	320871	25-27
32016112		35
323132	323563	29-31
32330519	32382819	35
330141	330871	25-27
334132	334562	29-31
340141	340871	25-27
344132	345762	29-31
350141	351871	25-27
351771KG		23
355133	355762	29-31
360141	362871	25-27
365132	366762	29-31
370141	370871	25-27
370141KG	370372KG	42
371141	371871	25-27
376142	377762	29-31
377044	377099	42,43
37724030	37749060	45
377707	377707xx	42
37778030	37783060	45
377824	377875	43
380141	380871	25-27
387142	387562	29-31
38724046	38783046	45
387824		43
38824046	38883060	45
397142	397562	29-31
405006	405908	130
41000007	54199907	121
41000009	54199809	122
410811DB	410813DB	75
410122	410185	119
410200	410399	75
410800	410899	75
415000	418999	63-65
421000	421999	54
422000	422999	57
423000	429999	54
430811DB	430813DB	75
430122	430126	119
430128	430139	67
430128	430129	29, 119
430132	430136	119
430138	430139	29, 119
430321	430883	75
430221	430399	75
430801	430883	75
434142	437542	67
446277	447827	55
450311	450881	75
450821DB		75
451131	456871	70-73
451160		69
452160		69
453160		69
453821		118
455161		118
456160		69
46552100		99
466171	469362	69
470111	476311	17
471000	472999	57
47120132	47580876	21
471817	476817	17
47112K	47884K	18
47280132	47580176	22
4752B176		23
4752W176		23
47621051	47731075	17
47820006		19
47821075		17
47822506	47832510	19
47831075		17
47526001	476.251.01	59
480117	480217	51
482114	483817	51-53
483230		67
484111	484318	52-53
485237	485337	51
486237	487817	51-53
488237	488248	51
499907	499921	121
501308	502825	105
50210103	53220303	123
503000	503999	101
504000	504999	103
506000	506999	106
50680560		107
507004	507006	109
507105 + 50719		107
507301	507308	112
507959		112
522120	522128	105
526101	526194	106
529301	53301024	109
533405		107
540067	541095	97
54120060	54120320	98
541301		118
542000	542999	101
54320060	54320320	98
544000	544999	110
546000	546999	112
549101	549108	107
551718		101
560000	560999	102
561304		102
562508	562535	114
563301		115
56532100	56554320	99
566601	568805	113
570907	570918	115
599921	599991	111
599908		114
85750001	85750007	123

In the course of further technical developments, the right is reserved to change the construction and appearance of the brushes without prior notice. Indications of size are approximate and without obligation or recourse to third parties.

Bold printed item numbers are always on stock.
Italic printed articles as well as special brushes will be produced for you with a short delivery time.
Please also see our terms on page 139.

EAN
All packaging units are marked with an EAN Code. This symbol shows, which articles are marked with an EAN Code in particular.

Keyword Index

Article	Page
Accessoires Wheel Brushes	36 - 37
Adapter Sets	36 - 37
Adapter Threads	37, 113
Band Saw Brushes	34 - 35
Battery Terminal Brushes	115
Bevel Brushes	56 - 57
Blister packaging	122
Boiler Brushes	108 - 110
Boiler Brushes-Sets	111
Bore Hole Cleaning Brushes	103
Brake Caliper Bruhes ROKI	80
Bricklayer's Brushes	87
Brooms	88 - 89
Brushes for grass trimmers	58 - 59
Brushes for wood working	32 - 33
Brushes removing wet storage stain	85
Chimney Brushes	108 - 109
Cup and Bevel Brushes	**48 - 59**
Cup Brushes, abrasive filament	54
Cup Brushes, brass coated steel wire	54
Cup Brushes, crimped wire	54
Cup Brushes, knotted	50 - 53
Cup Brushes with Shank	66 - 67
Cup Brushes, straight filament	55
Cut Cases	123
Cylinder Brushes	100 - 102
Deburring Brushes	**38 - 47**
Deburring End Brushes	46 - 47
Deburring Wheel Brushes	40 - 43
Disc Brushes	129 - 131
Displaybox	121
DIY Brushes	**116 - 125**
DIY Brush Sortiments	118 - 121
Drive Arbors	36 - 37
Dusters	90 - 91
End Brushes, knotted	72 - 73
End Brushes with Shank	68 - 71
File Cards	87
File Cleaners	87
Fine Scratch Brushes	83
Fitting Brushes	114
Gas Cooker Brushes	83
Hand Brushes and Brooms	**76 - 93**
Hand Brushes Export Model	81
Hand Brushes Heavy Duty	81
Hand Brushes Rectangular and Violin	85
Hand Brushes Standard	69 - 79
Hand Brushes with Plastic Handle	80
Hand Brushes with Scraper	81
Hand Brushes with Strap	85
Hand Brushes with Two-Components Handles	80
Handles and Extensions	113
Hanger assembly for tube brushes	123
Hole Cleaning Brushes	102
Industrial Brushes	**126 - 137**
Interior Brushes	**93 - 115**
Joint Cleaning Brushes	19
Knotted Wheel Brushes	16 - 18
Lath Brushes	132 - 133
Metal Discs Spare Parts	36 - 37
Mikroabrasive Interior Brushes	96 - 98
Mikro Interior Brushes	99
Miniature Brushes	74 - 75
Packaging and Presentation	122 - 123
Pipeline Brushes	20 - 23
Plasterer's Brushes	87
Radiator Brushes	86
Rivet Brushes	81
Roller Brushes	44 - 45
Rust Scratcher	115
Satin Brushes	32 - 33
Scratchers	115
Scrubs	88 - 89
Shank Brushes	**60 - 75**
Single Segment Brushes	24 - 27
Sleeve Brushes	107
Soldering Fluid Brushes	115
Soluble Oil Brushes	115
Spark Plug Brushes	82
Special Hand Brushes	84 - 87
Special Wheel Brushes	34 - 35
Spiked Rollers	87
Staining Brushes	86
Stove Pipe Brushes	112
Strip Brushes	137
Striped Brushes	136-137
Stripping Brushes	34 - 35
Structuring Brushes	62, 64
Tube Brushes	104 - 107
Universal Wire Brushes	81
Wheel Brushes	**14 - 37**
Whell Brushes with Shank	62 - 65
Wheel Brushes with Thread	56 - 57
Weed Brooms	92 - 93
Weed Brushes	92 - 93
Wide Face Brushes	134

General Conditions of Sale and Delivery

Dear customer, you can find the full version of our general conditions under www.lessmann.com
The most important conditions are:

1. Scope
Our general conditions of sale apply exclusively; we do not acknowledge any conditions of the customer which are contrary to or deviate from our general conditions of sale, unless we explicitly consented in writing to their validity. All agreements reached between us and the customer for the purpose of carrying out this contract must be made in writing. This applies also to offers and orders which were agreed with our sales representatives. Our general conditions of sale shall apply only to commercial businesses, not to private consumers.

2. Offer
All prices contained in an offer are subject to alterations. The prices are valid as fixed prices for 6 months, only after acknowledgement of the order. We reserve rights of ownership and copyrights on diagrams, drawings, design worksheets and other documents; they must not be made accessible to third parties.

3. Prices – Terms of Payment
All prices are in € (EURO), ex works Oettingen, exclusive costs of packaging. Our prices do not include Value-Added Tax. Unless stated otherwise in the acknowledgement of the order we grant 2% cash discount on payments in cash made within 10 days after the date of the invoice, payments shall be made within 30 days from the date of the invoice. In case of a delayed payment, we are entitled to demand interest at a rate of 4% p.a. above the actual basis rate of the EZB.

6. Reservation of Ownership
The customer shall obtain ownership of the delivered products only after we have received all payments from the business relationship with the customer. In the event of seizures or other actions by third parties, the customer shall inform us thereof immediately in writing. As far as the third party is not able to reimburse our total costs of legal action in accordance with paragraph 771 of the German Code of Civil Procedure, the customer shall reimburse us the loss. The customer is entitled to sell the products. The customer shall assign all rights and titles arising from the further sale to us regardless of wheth er the products have been processed or not. The customer remains entitled to collect the payments from the sales. We shall not collect any payments except the customer is behind with payments and/or has gone bankrupt and/or has stopped payments. Any processing, marking or other changes of the products by the customer shall be done on our behalf. If we have to take back the products, the customer shall give us the name and address of the customer who wished the products to be processed, marked or changed. We shall, at the request of customer, release our rights and titles up to the amount which exceeds 20% of the value of our payment claim to be protected. The selection of the rights and titles to be released shall be at our discretion.

7. Place of Jurisdiction – Place of Performance – Law
Place of jurisdiction shall be the place of our office. We also may take proceedings against the customer at the place of its office. Our office is the place of performance, unless our acknowledgement of the order stated something different. The laws of the Federal Republic of Germany shall apply. The United Nations Convention on Contracts for the International Sale of Goods (CISG) shall not apply.

8. Miscellaneous
Special designs can not be taken back. Our deliveries may deviate from the agreed volume by +/- 15%.
The minimum order value, as well as extra payments for small volume purchases, are fixed in the actual price list. Quantities deviating from the standard packet will be increased or decreased to the corresponding standard packet, otherwise extra payments per incomplete packet will be charged in accordance with the actual price list.
Minimum order value:
For stock articles (**bold printed** articles):
net € 100,00
For special production and *italic printed* articles:
net € 250,00 / article
Extra payment for incomplete packets:
net € 3,00

Express delivery on extra charge available.

We reserve the right to change the construction and design of the brushes in the course of further technical developments. Information to measurements are approximate and not binding. All measurements are in mm.

Notes

LESSMANN®

More information...

... found on our homepage!

Beside the variety of languages (german, english, spanish, czech, turkish and russian) we also provide you with useful information.

For example you can download:
- the complete article-number-catalogue-side-index
- enquiry forms of the different special brushes
- notes regarding the filling materials e. g. tables of the chemical and physical characteristics
- our brochure "Brush-Know-How"
- safety and operating instructions
- ISO 9001 certificate
- general terms and conditions

Please also ask for our special leaflets:
- Deburring with Brushes
  Art. No. 99EGBENG
- Interior Brushes / Miniature Brushes
  Art. No. 99INBENG
- Disc Brushes
  Art. No. 99TBDEUENG
- Brush Know How
  Technical Advice
  Art. No. 99BKHENG

THE GERMAN BRUSH COMPANY

LESSMANN®

www.lessmann.com

LESSMANN®

More than 10.000 solutions ...

As a constantly developing and producing specialist we are able to produce special brush models in both small and large series production runs. This is brought about by our own engineering, tool, and equipment building department in association with our modern machine facilities.

LESSMANN®

THE GERMAN BRUSH COMPANY

Lessmann GmbH
Lucas-Schultes-Str. 2
86732 Oettingen
Germany

Tel.: +49 9082 707-0
Fax: +49 9082 707-78

www.lessmann.com
info@lessmann.com

Accredited with DIN EN ISO 9001:2008

QUALITY MADE IN GERMANY